Short and mid-term perspectives

. **Next experiment at the Tandem in Orsay**

→ test of prototypes
→ test of electronics (iPACI, peak finder)

. **The MUGAST configuration @ AGATA**

→ configuration
→ physics cases

. **MUGAST configuration on LISE**

M. Assié, IPN Orsay
assie@ipno.in2p3.fr

Prototypes for GASPARD-TRACE

Ordered to Micron :

- **2 trapez**. prototypes DSSSD ordered by IPN in Nov. 2013 *delivery expected* ***end of April 2015***

- **2 square** prototypes ordered by INFN end of 2014 **+ 1 thick square DSSSD**

→very large (close to 6 inches) thin layers
→Thick 6 inches layers are challenging

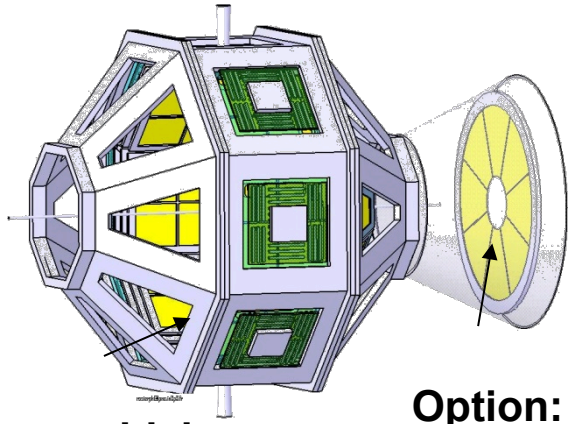

Trapezoidal shapes for endcaps

Option: Annular detectors

Prototypes for GASPARD-TRACE

Ordered to Micron

- **2 trapez**. prototypes DSSSD ordered by IPN in Nov. 2013 *delivery expected* ***end of April 2015***

- **2 square** prototypes ordered by INFN end of 2014 **+ 1 thick square DSSSD**

Next steps :

after validation of prototypes (see next slides) :
1 trapez. detector to be ordered by **Surrey**
1 trapez. detector to be ordered by **IPN-Orsay**

Total nb of detectors :

First layer (500um)
- 4 trapez. detectors
- 2 square detectors

2nd layer
- 1 thick (1.5mm) square detector

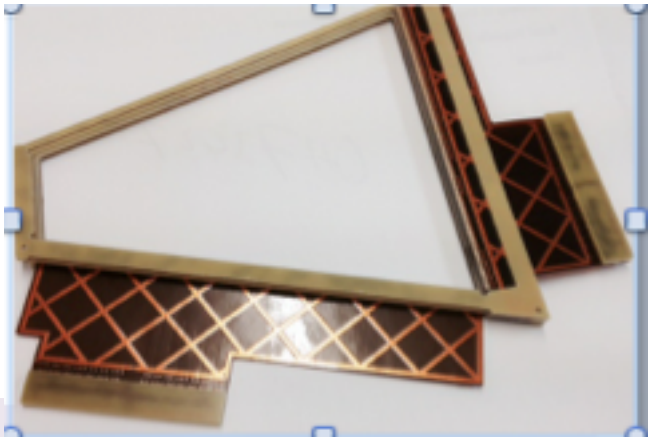

Test-bench for prototypes

- **Digital test bench:**
  4X+4Y -- PACI -- WaveCatcher
  9X+9Y -- iPACI -- WaveCatcher

→with alpha sourc

- **Analog test bench:**
  2 options under study :
  1) MUFEE *(MUST2)*+ MUVI + GANIL DAQ
  2) COFEE *(MUSSET)* + MUVI + GANIL DAQ

→ 128X+128Y channels with alpha source

- **Captinnov'** (A. Torrento)

→ Testbench for point probe measurement for DSSSD

- leakage current per strip
- capacitance per strip
- resistance of the interstrip

!!! may damage the detector

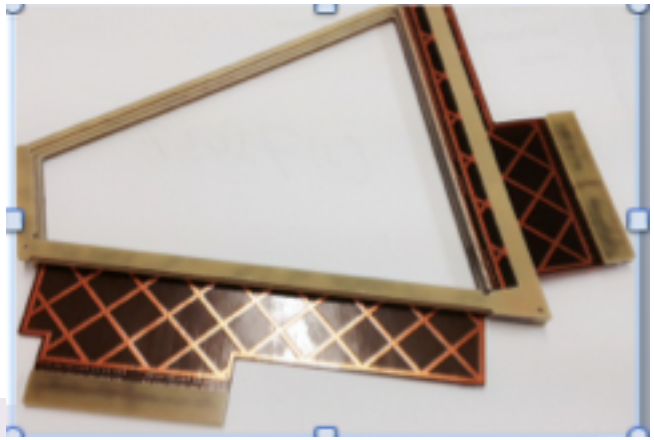

Next experiment @ Tandem (june 2015) : Test of prototypes and electronics

- **Measurement** : $^{7}Li + ^{12}C$ @ 35 MeV(as in previous tests) pulsed beam
- **Set-up :**
  (a) 40um + Prototype+ PAD : 4X+4Y read by **PACI** (as in previous tests
  (b) 40um + Prototype+ PAD : 9X+9Y (long/short strips) read by **iPACI**
  acquisition = Wavecatcher (64 channels)

board for iPACI

→ See E. Rindel, J-J Dormard talks

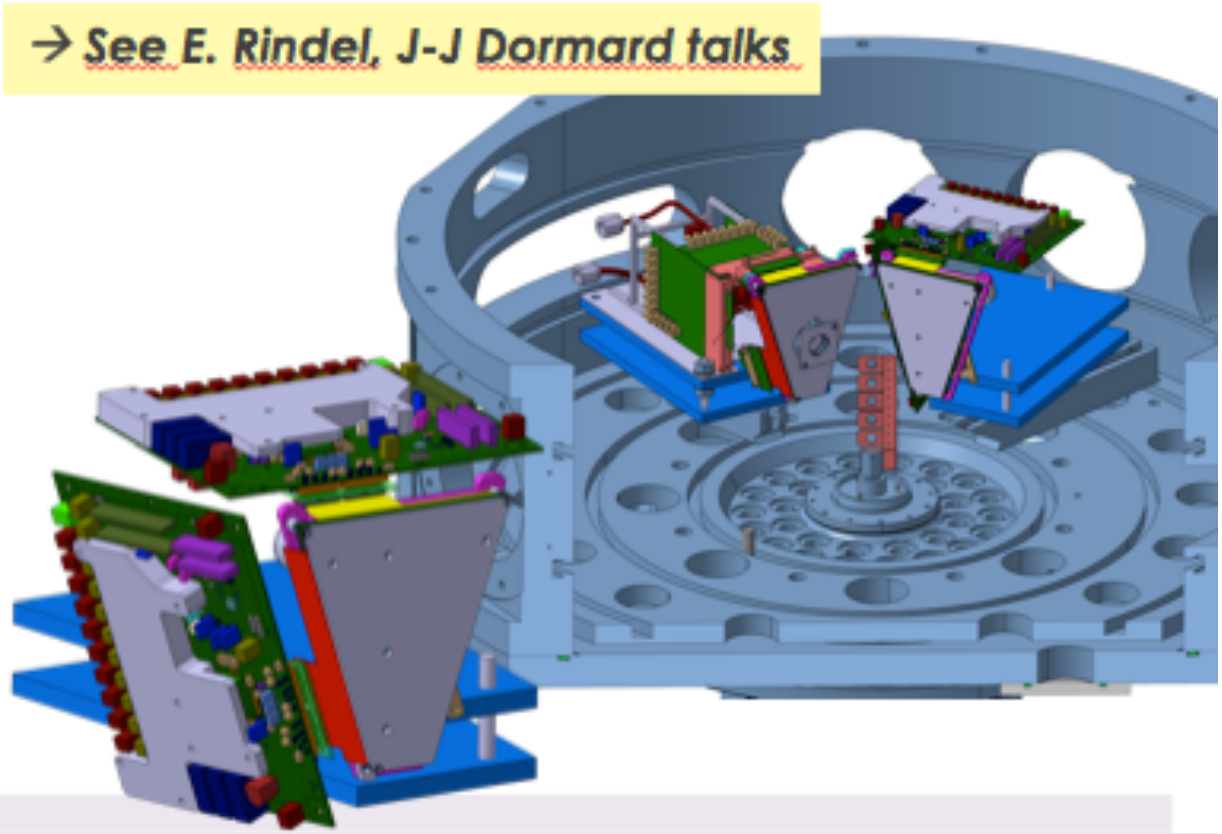

Next experiment @ Tandem (june 2015) : Test of prototypes and electronics

- **Measurement** : $^{7}Li + ^{12}C$ @ 35 MeV (as in previous tests)
- **Set-up :**
  (a) 40um + Prototype+ PAD : 4X+4Y read by **PACI** (as in previous tests
  (b) 40um + Prototype+ PAD : 9X+9Y (long/short strips) read by **iPACI**
  Acquisition = Wavecatcher (64 channels)

Objectives
1) Validate prototypes for trapezoidal shape
2) Validate iPACI first run
3) Study of PSA for various strips surfaces i.e. capacitances
4) New test of peak finder for current signal

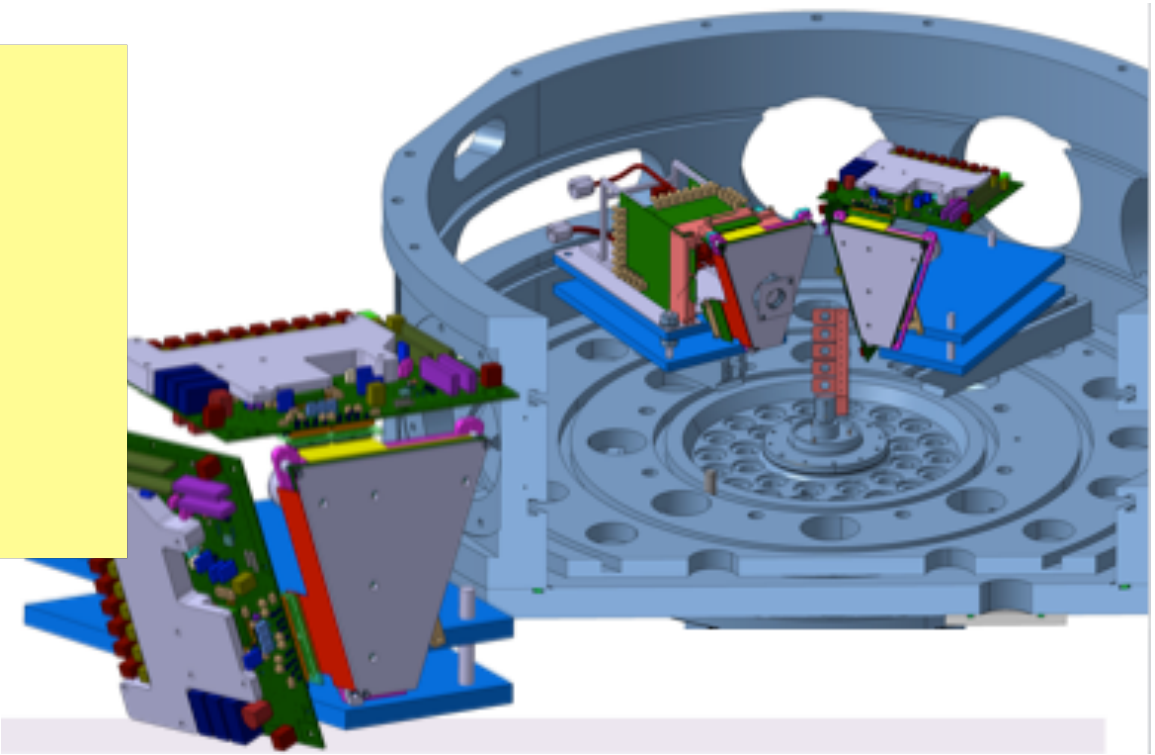

Next experiment @ Tandem (june 2015) : Test of prototypes and electronics

- **Measurement** : $^{7}Li + ^{12}C$ @ 35 MeV (as in previous tests)
- **Set-up :**
  (a) 40um + Prototype+ PAD : 4X+4Y read by **PACI** (as in previous tests
  (b) 40um + Prototype+ PAD : 9X+9Y (long/short strips) read by **iPACI**
  Acquisition = Wavecatcher (64 channels)

Objectives
1) Validate prototypes for trapezoidal shape
2) Validate iPACI first run
3) Study of PSA for various strips surfaces i.e. capacitances
4) New test of peak finder for current signal

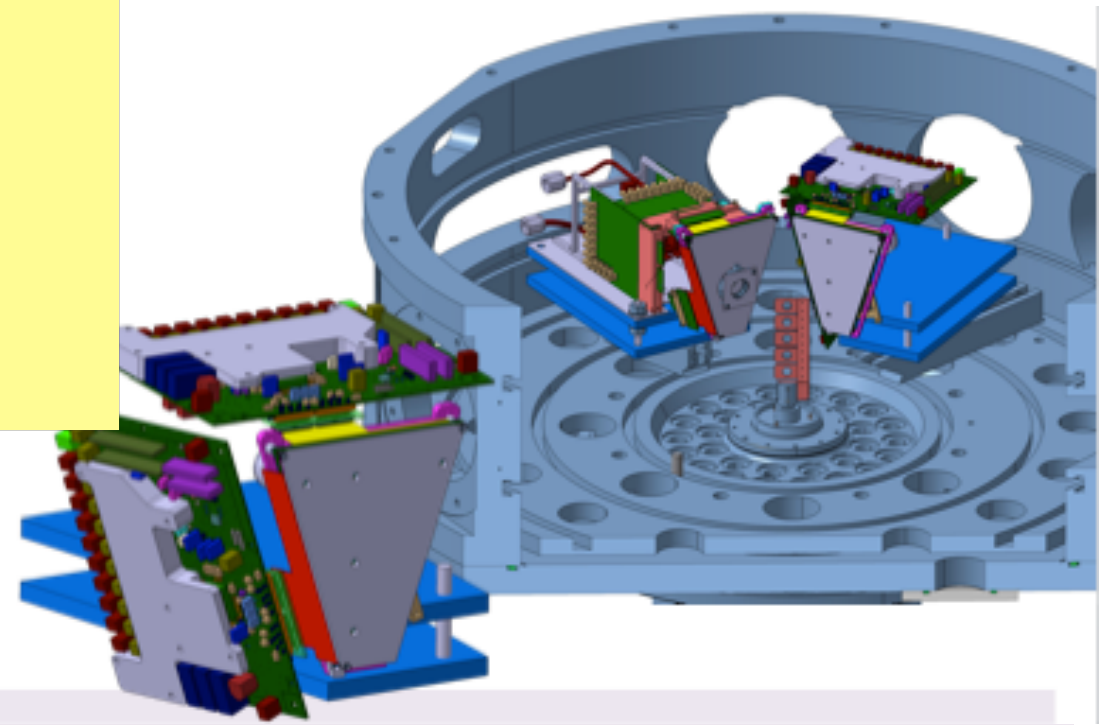

Next steps:
radiation damage measurments

MUGAST configuration ~ end 2017

AGATA campaign on VAMOS @ GANIL until end of 2017, 2018 ?

→ LoI for AGATA+MUGAST sent for the next PAC @ GANIL

. very high energy resolution (5keV)
. good efficiency (about 5% depending on number of clusters)

. GASPARD one-layer of Silicon in the backward direction (AGATA side) (TIARA spirit)

→ well-suited for stripping measurements

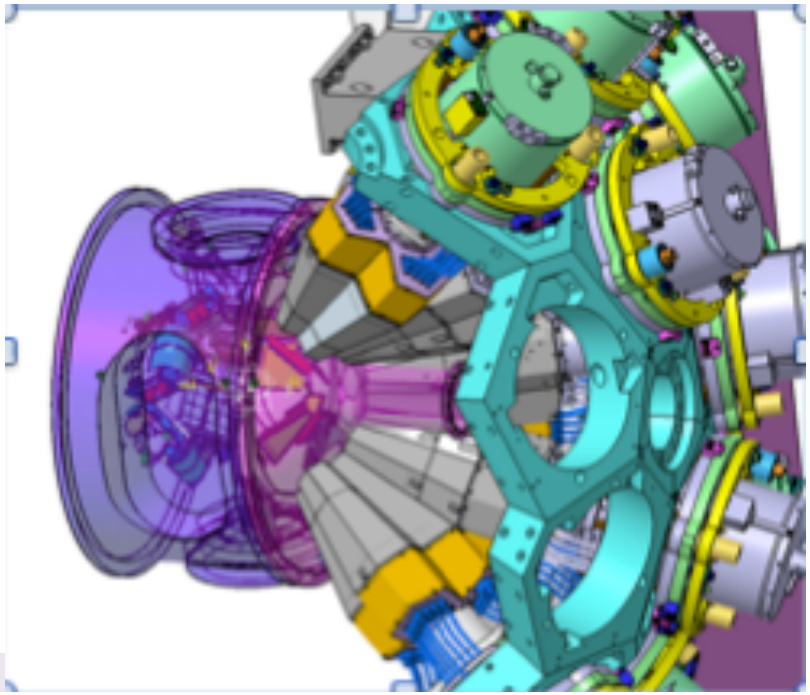

MUGAST configuration ~ end 2017

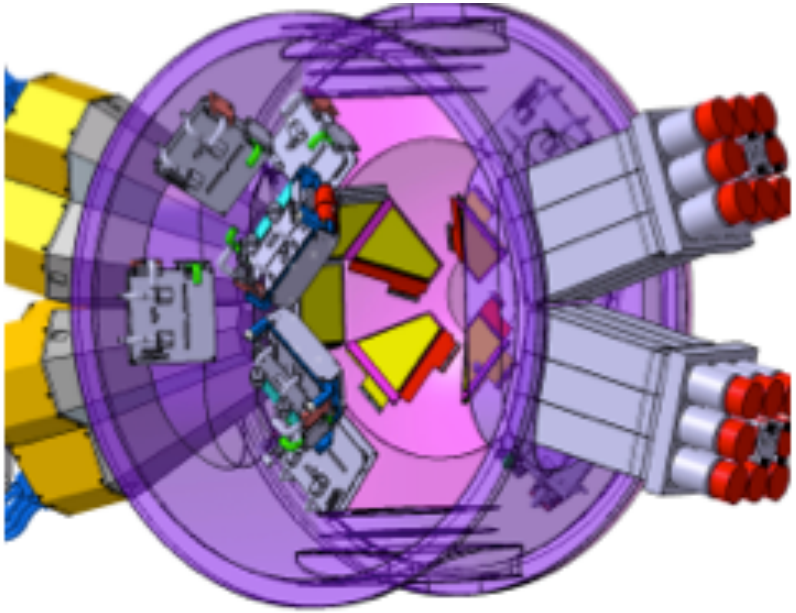

Detectors

- **4 MUST2** (forward direction)
- **4 trapezoid DSSSD 500um** (backward)
- **2 square DSSSD 500um** (90 deg.)
- **annular detector**

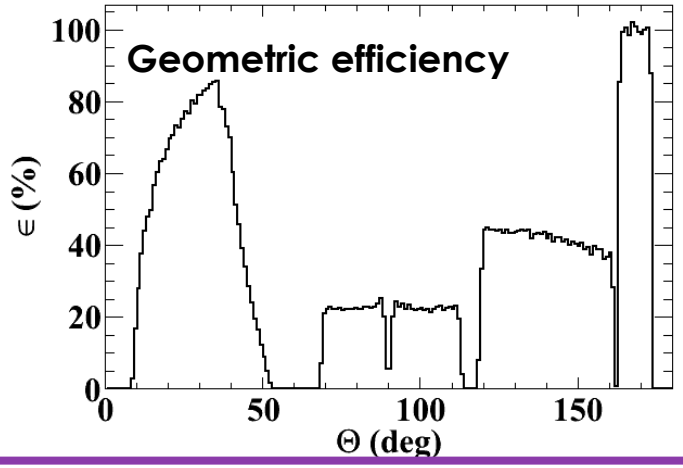

MUST2 (close config.)

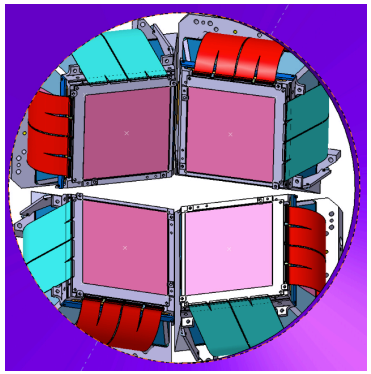

TRAPEZES (GASPARD) +CARRES (Trace)

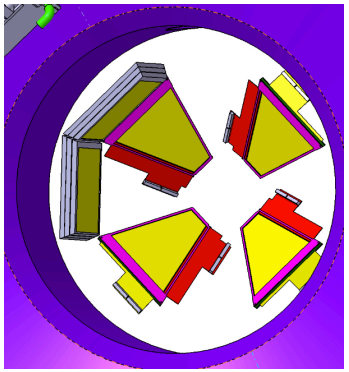

Some examples of LoI

→ **Shell Evolution**
^{29}Mg (d,p) , ^{27}Na (d,p)

→ **Pairing**
^{48}Cr(^{3}He,p)

→ **nuclear astrophysics**
^{15}O(^{6}Li,d)^{19}Ne, ^{30}P(d,p),

MUGAST configuration

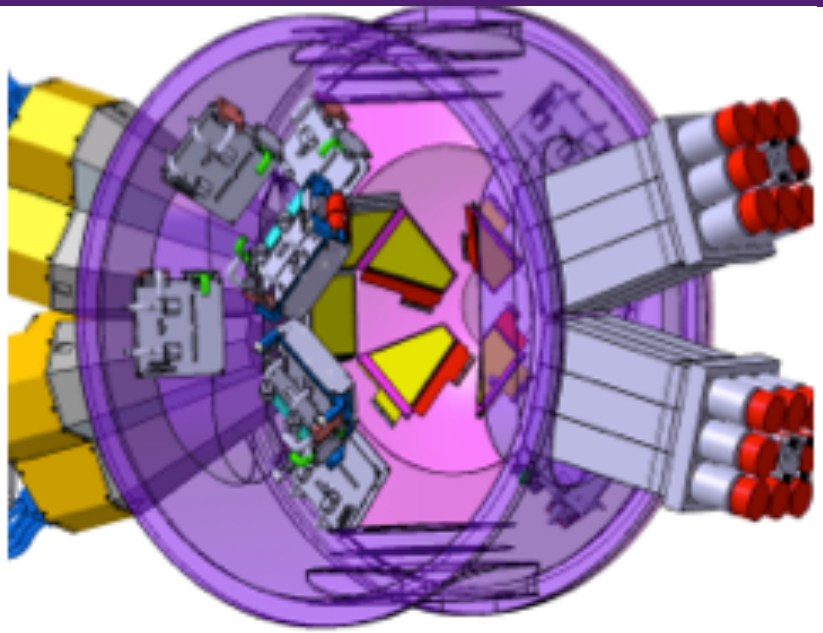

Electronics

- 4 MUST2 = **MUFEE(2x4) + MUVI(1)**

- 4 trapezoid DSSSD 500um (backward)
+ 2 square DSSSD 500um (90 deg.)
+ annular ?

Option 1:

- MUFEE (7x2) + 2 MUVI

MUST2 (close config.)

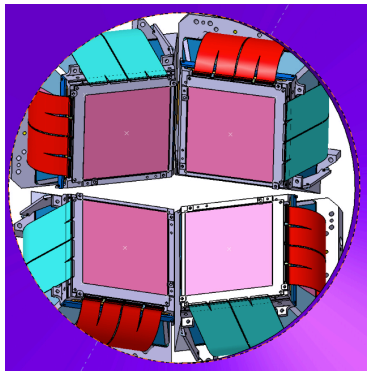

TRAPEZES (GASPARD) +CARRES (Trace)

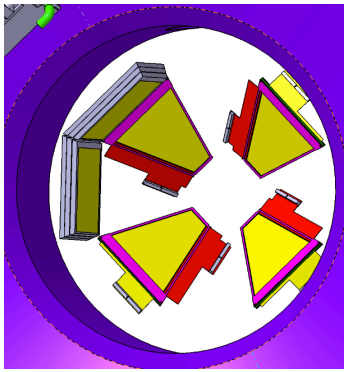

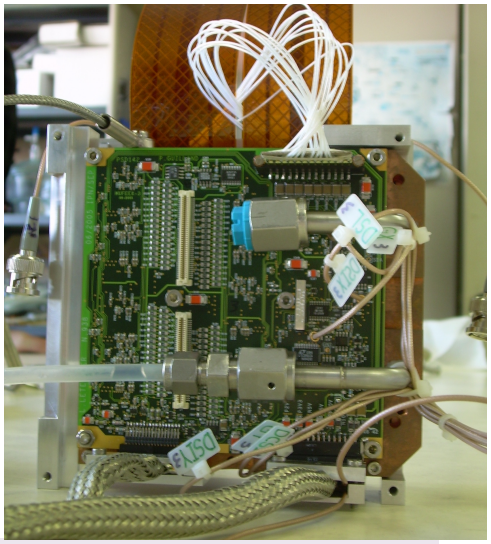

MUGAST configuration

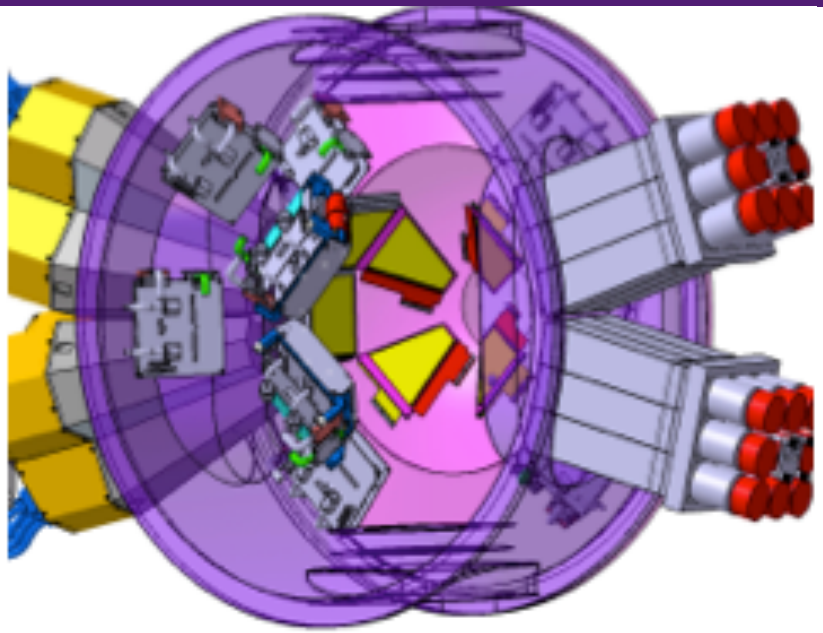

MUST2 (close config.)

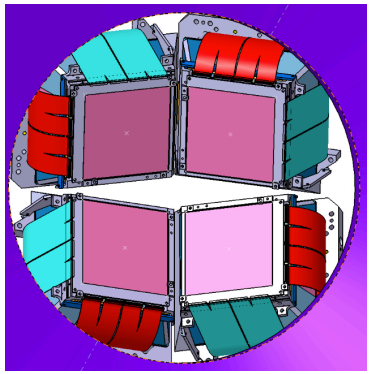

TRAPEZES (GASPARD) +CARRES (Trace)

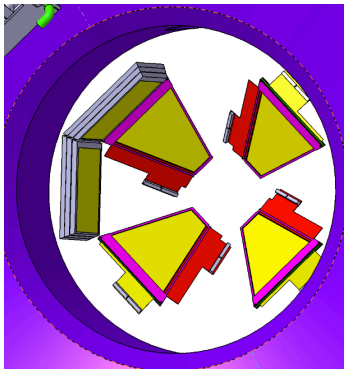

Electronics

- 4 MUST2 = **MUFEE(2x4) + MUVI(1)**

- 4 trapezoid DSSSD 500um (backward)
+ 2 square DSSSD 500um (90 deg.)
+ annular ?

Option 1:

- MUFEE (7x2) + 2 MUVI

Option 2:

- COFEE (7x2) *MUSSET electronics*
+ 4 MUVI
+ polarisation circuits *(to be done)*

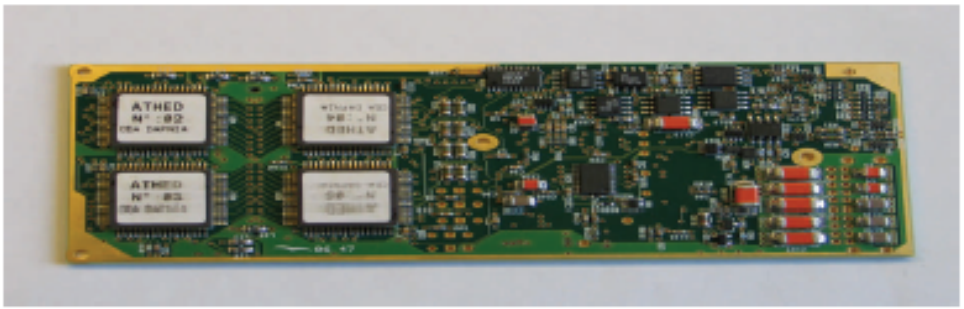

MUGAST configuration

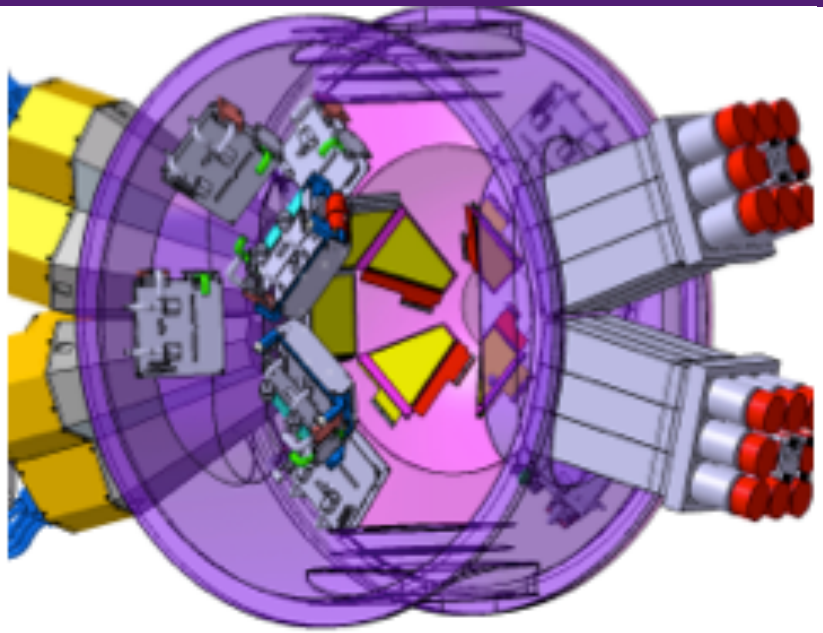

MUST2 (close config.)

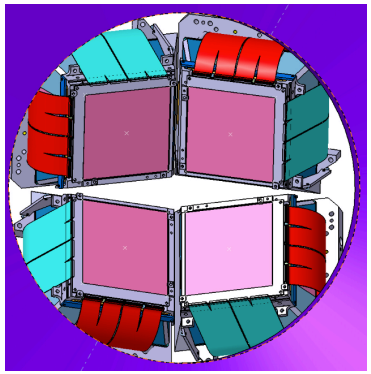

TRAPEZES (GASPARD) +CARRES (Trace)

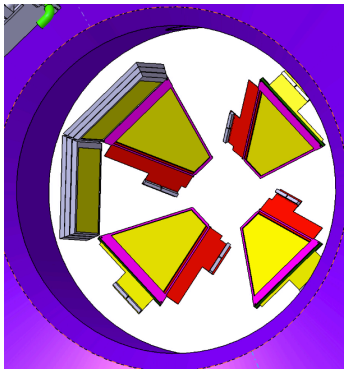

Electronics

- 4 MUST2 = **MUFEE(2x4) + MUVI(1)**

- 4 trapezoid DSSSD 500um (backward)
+ 2 square DSSSD 500um (90 deg.)
+ annular ?

Option 1:

- MUFEE (7x2) + 2 MUVI

Option 2:

- COFEE (7x2) *MUSSET electornic*
- + 4 MUVI
  + polarisation circuits *(to be done)*

To do :

- new kaptons (E. Wanlin)
- new cooling blocs
- reaction chamber **(→ see Ph. Rosier talk**)

MUGAST coupled with other detectors (?)

MUGAST & demonstrator phase

« MUGAST » configuration = MUST2 + GASPARD (trapeze) +TRACE (square)
available for AGATA campaign at GANIL **(end 2016)**
read by **MUST2 electronics (MUFEE+MUVI)**

- **Ancillary detectors :**
  - 6 PARIS clusters (if available)

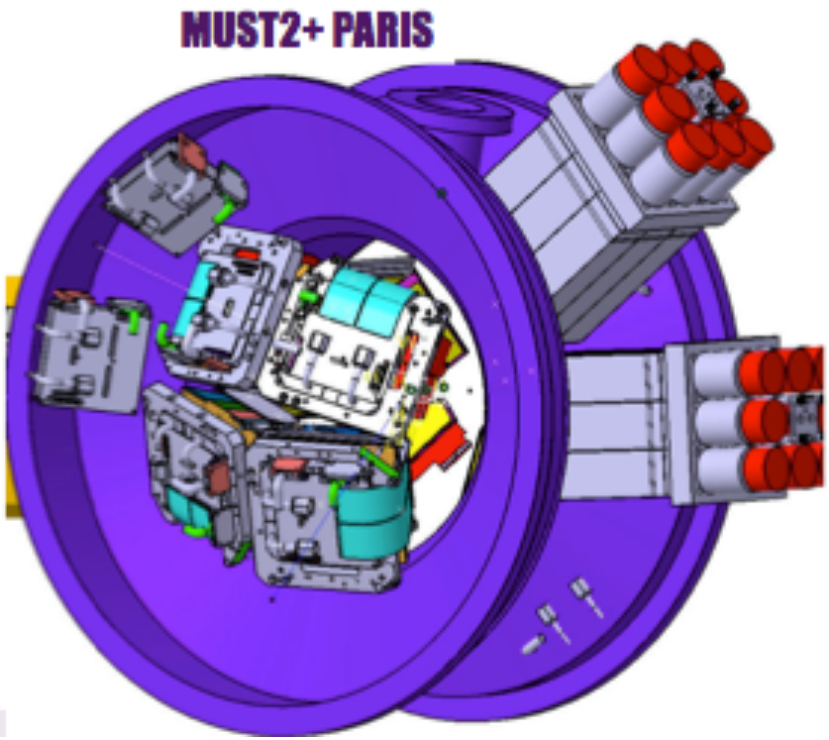

Short and mid-term perspectives

MUGAST & demonstrator phase

« MUGAST » configuration = MUST2 + GASPARD (trapeze) +TRACE (square)
available for AGATA campaign at GANIL **(end 2016)**
read by **MUST2 electronics (MUFEE+MUVI)**

- **Ancillary detectors :**
  - 6 PARIS clusters (if available)
  - **6 EXOGAM**

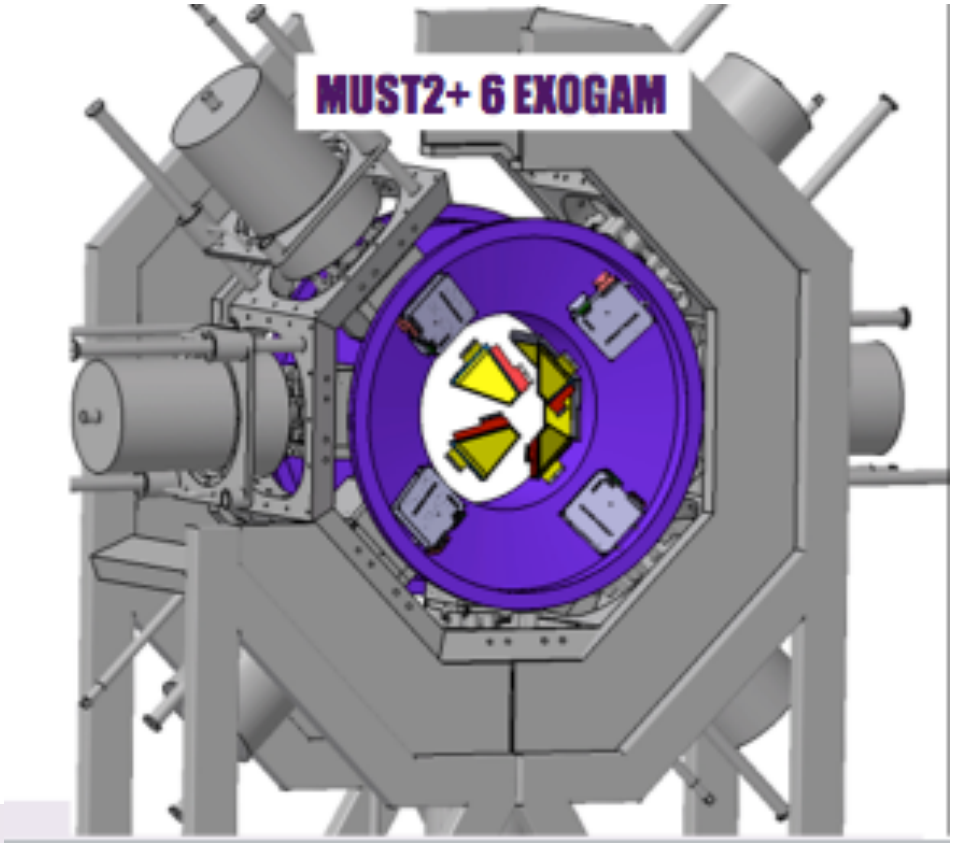

Short and mid-term perspectives

MUGAST & demonstrator phase

« MUGAST » configuration = MUST2 + GASPARD (trapeze) +TRACE (square)
available for AGATA campaign at GANIL **(end 2016)**
read by **MUST2 electronics (MUFEE+MUVI)**

- **Ancillary detectors :**
  - 6 PARIS clusters (if available)
  - 6 EXOGAM
  - **^{3}He/^{4}He cryogenic target**

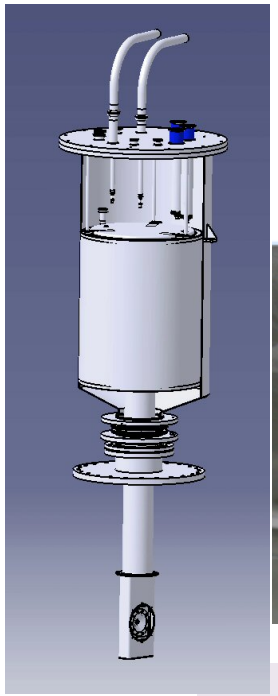

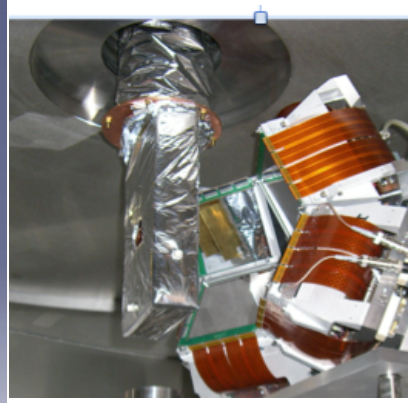

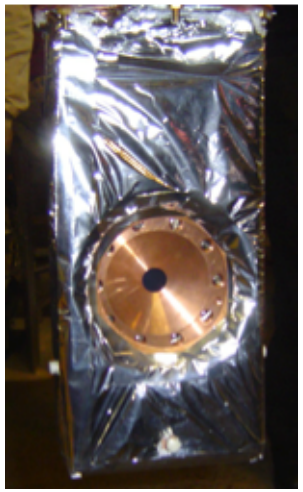

MUST2 (close config.)

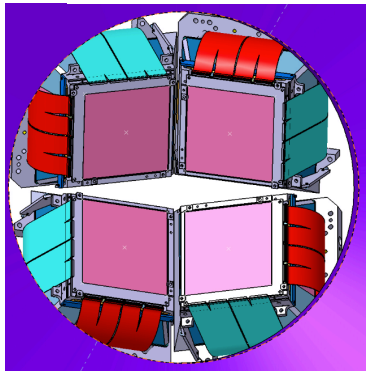

TRAPEZES (GASPARD) +CARRES (Trace)

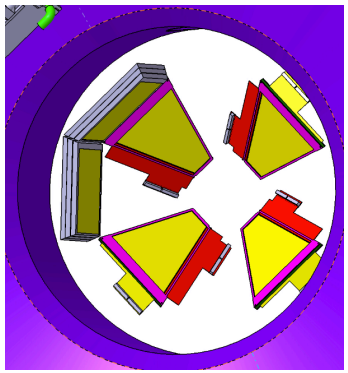

Short and mid-term perspectives

MUGAST & demonstrator phase

« MUGAST » configuration = MUST2 + GASPARD (trapeze) +TRACE (square)
available for AGATA campaign at GANIL **(end 2016)**
read by **MUST2 electronics (MUFEE+MUVI)**

- **Ancillary detectors :**
  - 6 PARIS clusters (if available)
  - 6 EXOGAM
  - $^{3}He/^{4}He$ cryogenic target
  - **FAZIA prototype**