Microwave multiplex read out for superconducting sensors

E. Ferri[1], D. Becker[2], D. Bennett[2], M. Faverzani[1], J. Fowler[2], J. Gard[2], A. Giachero[1], J. Hays-Wehle[2], J. Hilton[2], M. Maino[1], J. Mates[2], A. Puiu[1], A. Nucciotti[1], D. Schmidt[2], D. Swetz[2], J. Ullom[2], L. Vale[2]

[1]University of Milano-Bicocca & INFN Milano-Bicocca, Milano, Italy
[2]NIST, Boulder, CO, USA

ERC – Advanced Grant 2013
GA n. 340321
PI: S. Ragazzi, HI:INFN

Frontier Detectors for Frontier Physics
13th Pisa Meeting on Advanced Detectors
24–30 May 2015 ● La Biodola, Isola d'Elba (Italy)

In the last years, the progress on low temperature detector technologies has allowed to design large scale experiments aiming at pushing down the sensitivity on the neutrino mass below 1 eV. Even with outstanding performances in both energy (~ eV on keV) and time resolution (~ 1 microsecond) on the single channel, a large number of detectors working in parallel is required to reach a sub-eV sensitivity. Microwave frequency domain read out is the best vailable technique to read out large array of low temperature detectors, such as Transition Edge Sensors (TESs) or Microwave Kinetic Inductance Detectors (MKIDs). This microwave multiplexing system will be used to read out the HOLMES detectors, an array of 1000 microcalorimeters based on TES sensors in which the 163Ho will be implanted. HOLMES is a new experiment for measuring the electron neutrino mass by means of the electron capture (EC) decay of 163Ho. We present here the microwave frequency multiplex which will be used in the HOLMES experiment and the microwave frequency multiplex used to read out the MKID detectors developed in Milan as well.

HOLMES

Neutrino mass measurement with a m_ν statistical sensitivity as low as 0.4 eV

Detectors: Transition Edge Sensor (TES) with ^{163}Ho implanted in Bi/Au absorbers

Activity:
6.5×10^{13} nuclei per detector
→ 300 dec/s

Performances:
$\Delta E \approx 1$ eV and $\tau_R \approx 1$ µs

16 channel demonstrator

Final configuration:
1000 channel array
- 6.5×10^{16} ^{163}Ho nuclei
- 3×10^{13} events in 3 y

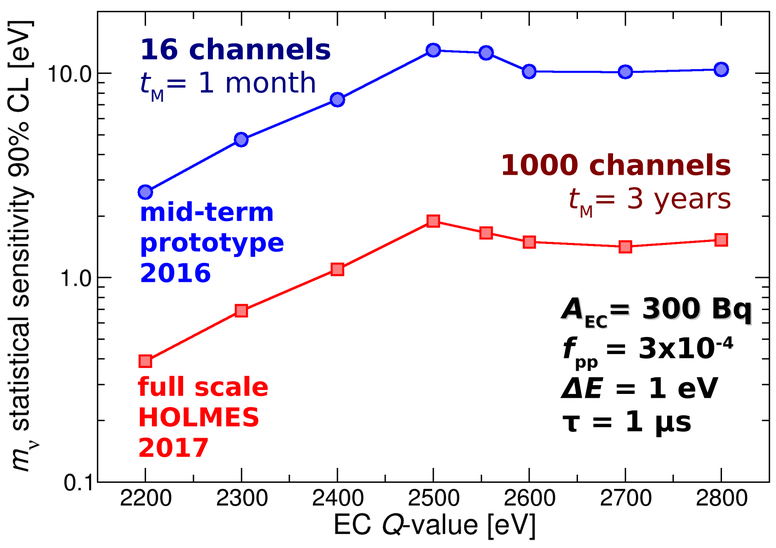

B. Alpert et al., Eur. Phys. J. C, (2015) 75:112

Detailed information on HOLMES: see A. Nucciotti's Poster
Detailed information on Ho implantation: see G. Pizzigoni's Poster

Rf-SQUID read out with microvawe multiplexing

- DC biased TES
- SQUID coupled with TES and a resonator circuit
- microwave rf-SQUID read out with flux ramp demodulation (common flux line inductively coupled to all SQUIDs

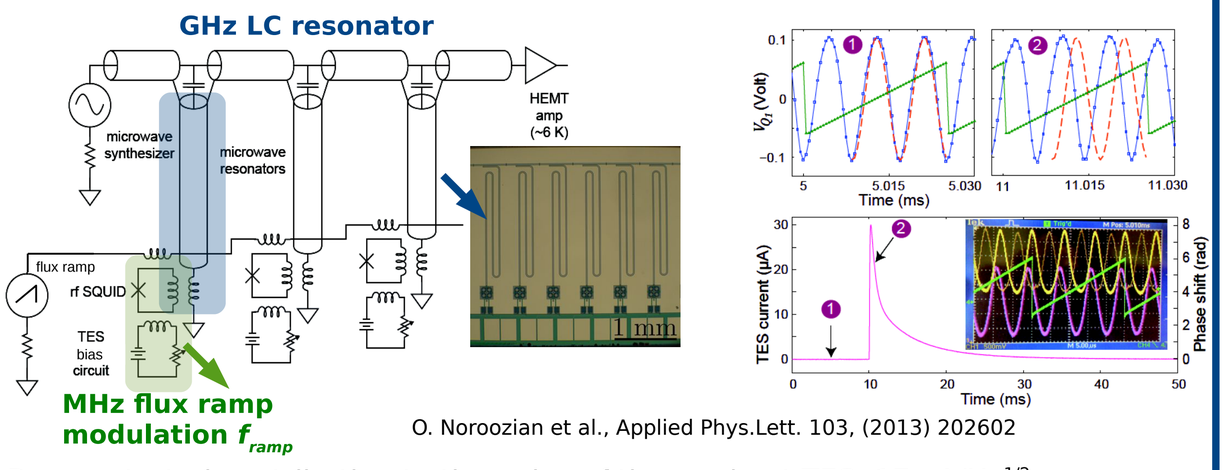

O. Noroozian et al., Applied Phys.Lett. 103, (2013) 202602

Demonstrated contribution to the noise of the read out TES: 17 pA/Hz$^{1/2}$

D. A. Bennet et al., IEEE Trans. Appl. Supercond. 25, (2014), 2101405

Bandwidth Budget:

- Effective sampling rate is set by the ramp – f_r
- Necessary resonator bandwidth per flux ramp: $\Delta f \gtrsim 2 n_{\Phi_0} f_r$
- To avoid cross talk spacing between resonances $f_n \geq 10\ \Delta f$ [potentially reduced by a factor 2]
- To avoid distortions $f_r \geq 10/\tau_r$ [potentially reduced by a factor 2]
- Available ADC bandwidth f_{ADC} with ROACH2 system 550 MHz
- Mux factor:

$$n_{mux} = \frac{f_{ADC}}{f_n} = \frac{f_{ADC}\,\tau_r}{25 \cdot 2\, n_{\Phi 0}}$$

- Number of flux per ramp n_{Φ_0}
  - currently 3, easily scalable to 2, feasible 1.1

τ_{rise}= 5 µs, n_{Φ_0}= 2 → $n_{mux} \approx$ 50

TES detectors

TES: cryogenic particle detector that exploits the strongly temperature-dependent resistance of the superconducting phase transition

- Excellent energy resolution
- Low impedance
- Large array and multiplexing (TDM; CDM; FDM, µmux)
- Tunable critical temperature Tc exploiting the proximity effect
  → Mo:Au or Mo:Cu proximity TES (Tc ~ 100 mK)

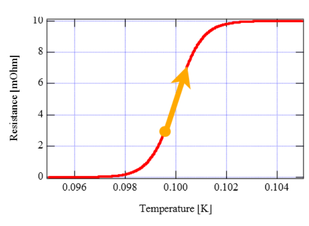

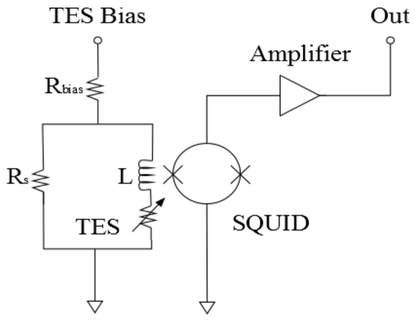

Homodyne detection

Signal reconstructed by homodyne detection and demodulation

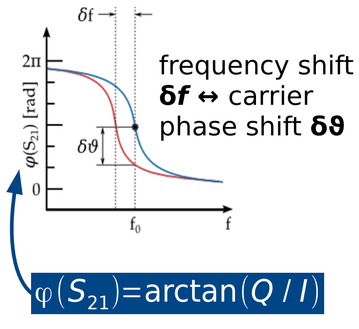

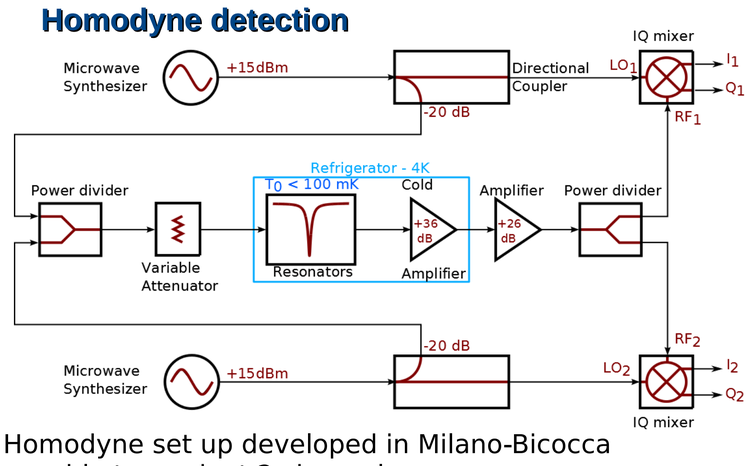

Homodyne set up developed in Milano-Bicocca capable to readout 2 channels

ROACH2 read out system

ROACH2-based Software defined Radio

- Xilinx FPGA based digital data processing
- frequency comb generation (up to ≈60 in 0-550 MHz)
- GHz band up/down conversion (5-5.5 GHz)
- homodyne detection: IQ signal de-multiplexing
- signal channelizing and rf-SQUID signal de-modulation
- real time signal processing
  → 140TB in 3 year

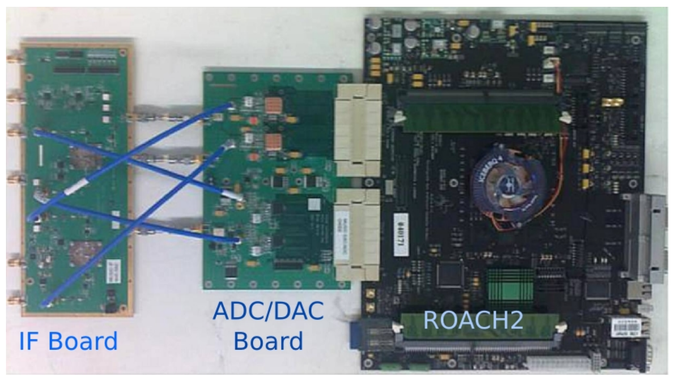

Test in progress @ Milano-Bicocca

- µmux 33 channels (2/3 of resonators shorted) + IF board with R_{shunt} + TES → all provided by NIST.
- Available:
  - 'naked' resonators with input coil directly linked to external wires for simulating the TES response
  - resonators + TES with a ^{55}Fe source
  - (activity of few Bq)
- Homodyne set up developed in Milano-Bicocca

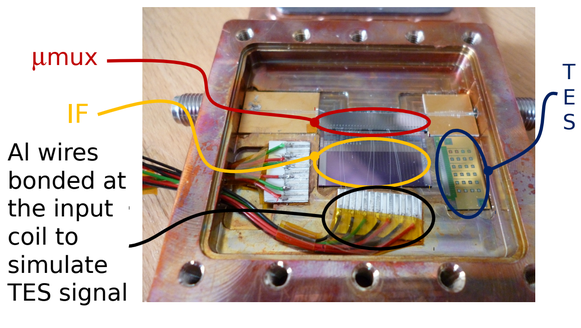

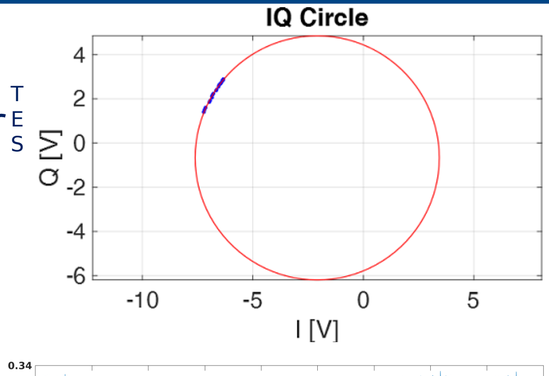

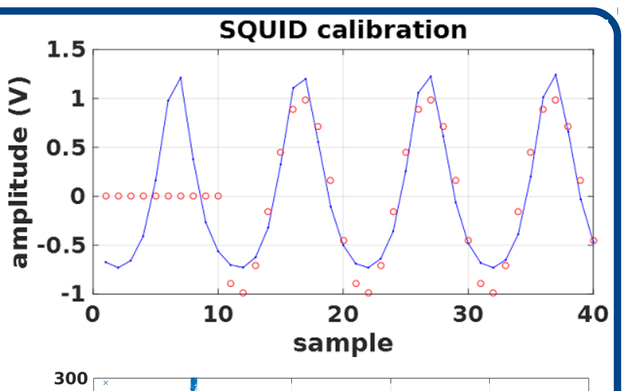

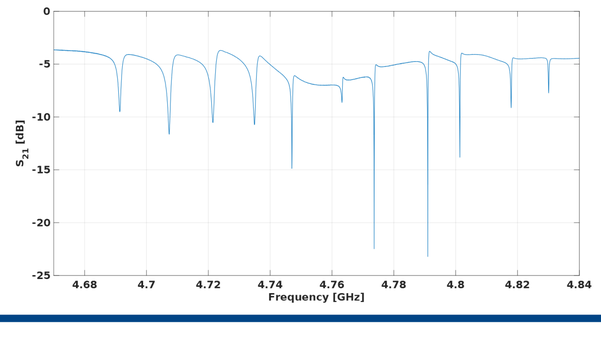

- G squid = 0.075 (V/Φ_0)
- M squid-ramp = 25 pH
- M TES-squid = 210 pH
- µA per flux unit in Φ_0 = 8.87
- f_{ramp} = 62.5 kHz
- f_{ADC} = 2.5 MHz
- noise ~ 100 pA/Hz$^{1/2}$