VELA: a fast DEPFET readout circuit for the IXO mission

L. Bombelli, C. Fiorini, M. Porro, J. Treis, T. Lauf

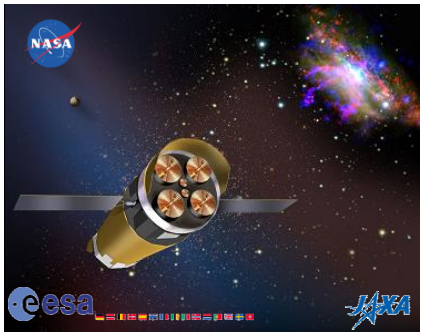

Application: Fast X-ray Imaging for Astronomy developed for the IXO mission.

The VELA (VLSI Electronic for Astronomy) ASIC is specifically design to fulfill the requirement of the WFI (wide field imager) instrument. The detector of the WFI will be a Active pixel matrix based on the DEPFET device.

WFI (*Wide Field Imager*) performances

Detector type:	**Active Pixel DEPFET**
Number of pixels:	1024 × 1024
Dynamic Range:	100 eV – 30 keV
Energy resolution:	**125 eV @ 6 keV**
	Noise: 3-5 e^- ENC
Time resolution:	**200 Hz in Full Frame Mode**
	Processing Time: 4 µs

DEPFET Matrix

VELA (VLSI Electronic for Astronomy)

Matrix Readout Strategy

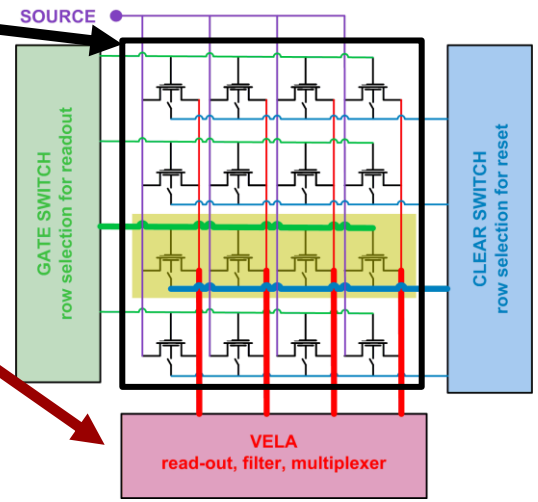

Fast Trapezoidal time-variant filter is needed

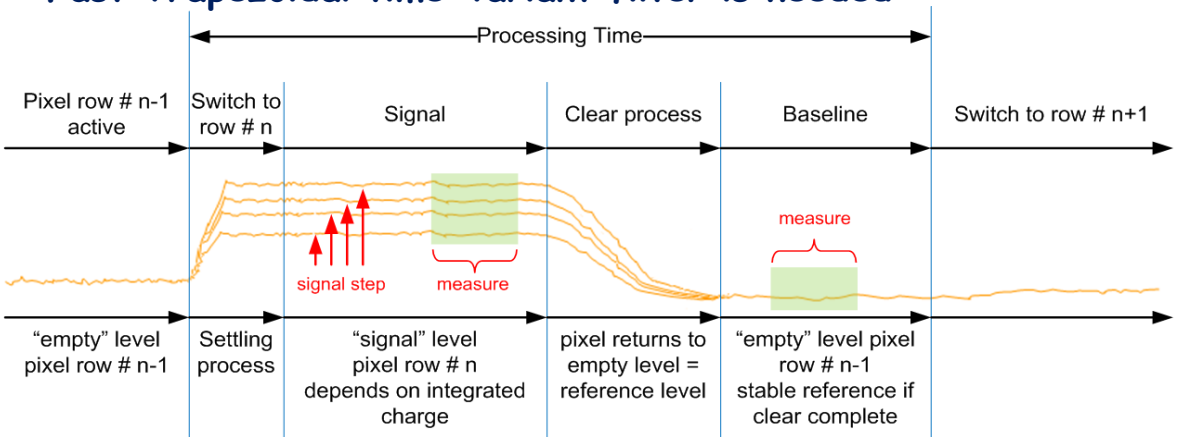

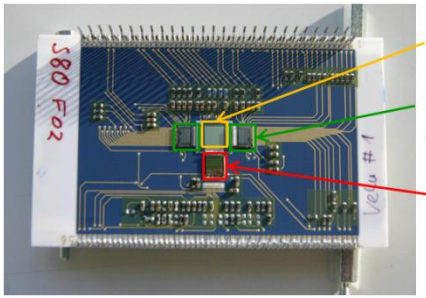

Image Capability offered by VELA

Operating principle of drain current read-out.

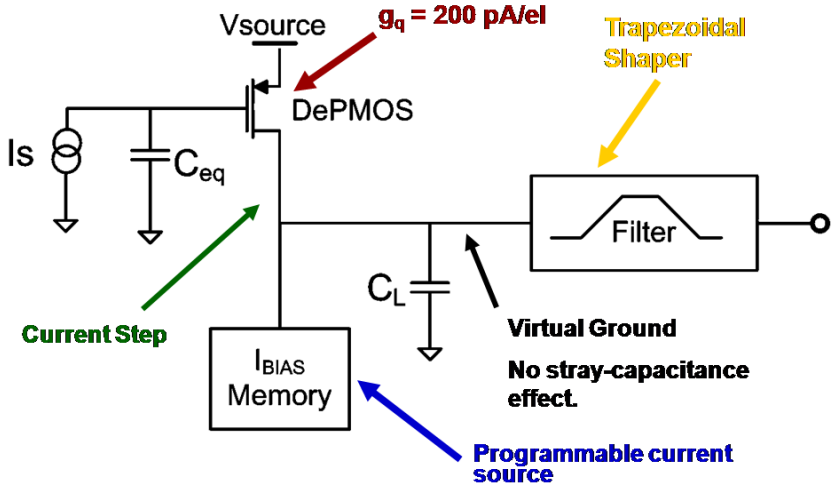

The novel **drain current readout** scheme overcomes the limitations of the conventional **voltage readout**.

- ✓ Since the information is sensed on the DEPFET drain, the input of the analog front-end can be a virtual ground. Thus, the stray capacitance have a negligible effect on the shape of the weighting function and **it is possible to operate the device at higher speed**.
- ✓ The gain increases as the square root of the current; thus, **it is possible to bias the DEPFET at a higher current to improve the performances**.

Layout of 64-channels VELA. Chip size is 5.2 mm x 4.6 mm.

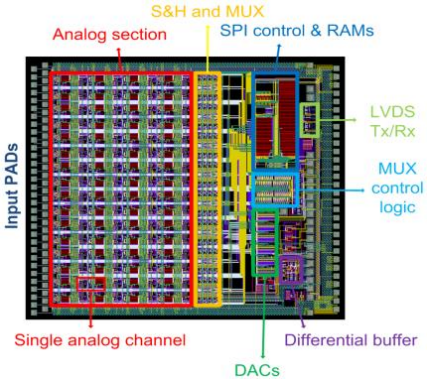

Hit Map

Processing time= 2 μs/line

Frame Rate = 7800 fps

Noise = 7.2 electrons ENC

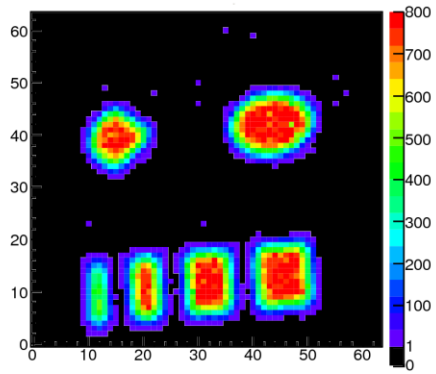

Recorded spectrum of ^{55}Fe source