Radiopurity control in the NEXT-100 double beta decay experiment

- ✓ **NEXT experiment**
- ✓ **Techniques and equipment**
- ✓ **Measurements and results**
  - Shielding
  - Vessel
  - Electroluminescence (EL) and HV components
  - Tracking readout plane
  - Energy readout plane
- ✓ **Summary and outlook**

Low Radioactivity Techniques 2013

S. Cebrián
(on behalf of NEXT Collaboration and LSC Radiopurity Service)

LSC Laboratorio Subterráneo de Canfranc

Universidad Zaragoza 1542

NEXT: Neutrino Experiment with a Xenon Time-Projection Chamber

➢ Goal and principle of detection

- Search for ββ of ^{136}**Xe** (Q=2.458 MeV) with **~100 kg** at **Canfranc Underground Laboratory** (LSC) in Spain
- ***Challenge:*** measurement of topological signature
  + optimization of energy resolution
  + detector = source approach
- ***Design:*** high pressure gaseous xenon TPC with proportional electroluminescent (EL) amplification

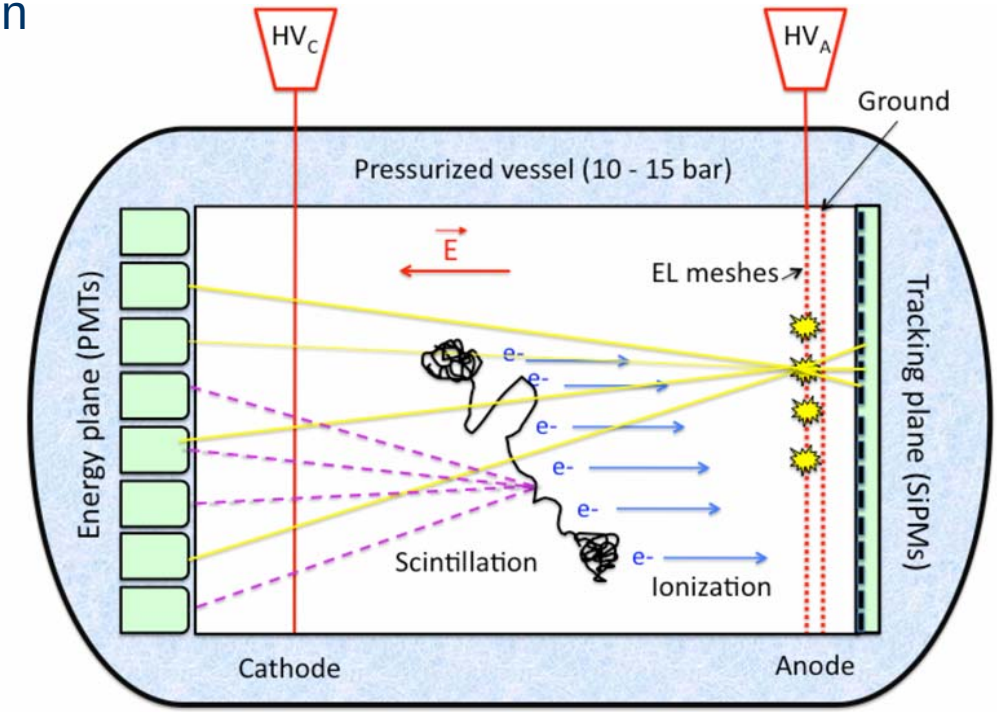

NEXT-100 Technical Design Report (TDR). Executive Summary, V. Alvarez et al, 2012 JINST 7 T06001

NEXT: Neutrino Experiment with a Xenon Time-Projection Chamber

- **Sensitivity and background requirements**
  - **Energy resolution: <1% FWHM at $Q_{\beta\beta}$**
    $\longrightarrow$ electroluminiscence
  - **Background level: 8 10^{-4} c keV^{-1} kg^{-1} y^{-1}**
    $\longrightarrow$ pattern recognition + radiopurity control
    ^{208}Tl: 2.615 MeV
    ^{214}Bi: 2.448 MeV

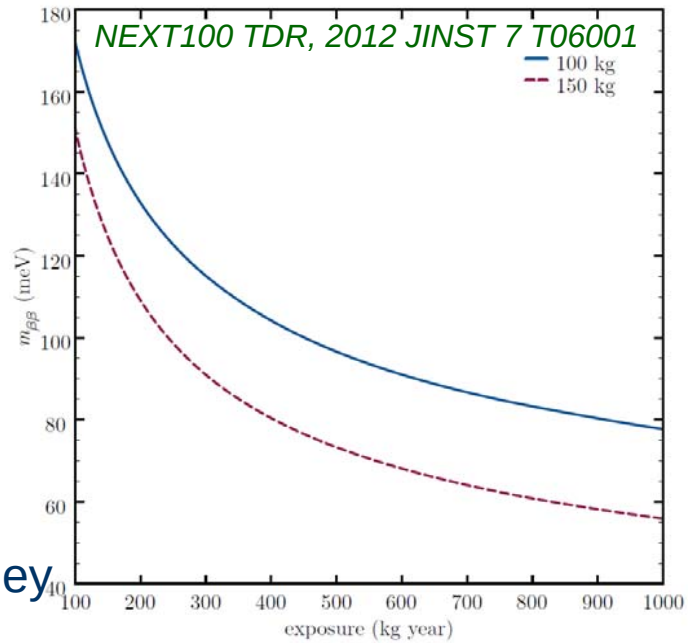

- **Status**
  - Work on EL prototypes at Valencia and Berkeley ongoing

Near-Intrinsic Energy Resolution for 30 to 662 keV Gamma Rays in a High Pressure Xenon Electroluminescent TPC, V. Alvarez et al, NIMA 708 (2013) 101-114
Initial results of NEXT-DEMO, a large-scale prototype of the NEXT-100 experiment V. Alvarez et al, JINST 8 (2013) P04002

  - Installation of shielding and ancillary system started at LSC
  - Assembly and comissioning of detector expected for 2014

NEXT: Neutrino Experiment with a Xenon Time-Projection Chamber

➢ Status

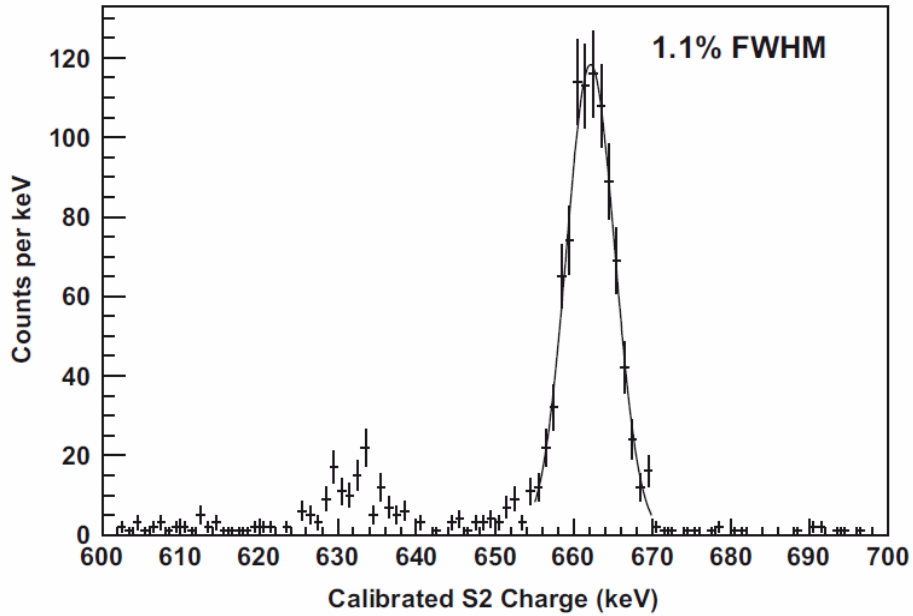

Fig. 13. Energy resolution at 10 atm for 662 keV gamma rays: These data were taken at 10.1 atm with a 0.16 kV/cm field in the drift region and 2.08 kV/(cm atm) in the EL region. If assumed to follow a $1/\sqrt{N}$ dependence this resolution extrapolates to 0.57% at $Q_{\beta\beta} = 2.459$ MeV.

^{137}Cs spectrum from NEXT-DMDB

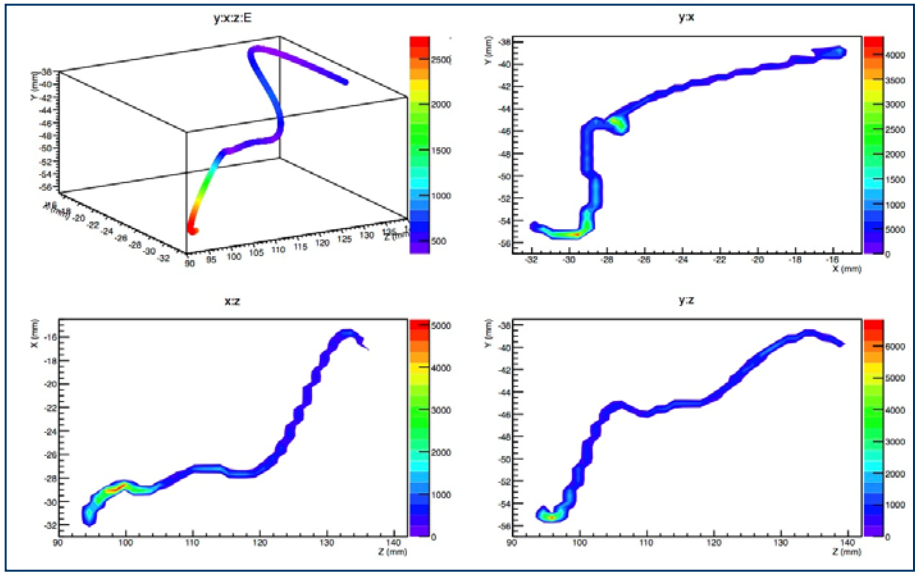

^{137}Cs reconstructed track from NEXT-DEMO

Near-Intrinsic Energy Resolution for 30 to 662 keV Gamma Rays in a High Pressure Xenon Electroluminescent TPC, V. Alvarez et al, NIMA 708 (2013) 101-114

Techniques and equipment

- **Glow Discharge Mass Spectrometry (GDMS)**
  - Performed by Shiva Technologies (Evans Analytical Group) in France
  - Used for several metal samples
  - Output: U, Th, K concentrations

- **Ge gamma-ray spectrometry**
  - Several p-type closed-end coaxial **HPGe detectors** of LSC Radiopurity Service

	Detectors	*DAQ*	*Shielding*	*Operation*
LSC Radiopurity Service: **GeOroel** **GeAnayet** **GeTobazo** **GeLatuca**	410-420 cm^3 Al cryostats	Canberra DSA 1000 modules	5 cm Cu + 20 cm low activity Pb flux of N_2 gas	Hall C, since 2011
U. Zaragoza: **Paquito**	190 cm^3 Cu cryostat	standard Canberra LA + ADC	10 cm arch. Pb + 15 cm low activity Pb flux of N_2 gas	Canfranc old facilities for several years, now at Hall C

Techniques and equipment

- **Ge gamma-ray spectrometry**
  - **Background** counting rates: c $d^{-1}kg^{-1}$

Detector name	Mass (kg)	100–2700 keV	^{232}Th:^{208}Tl 583 keV	^{238}U:^{214}Bi 609 keV	^{40}K 1461 keV
GeOroel	2.230	490±2	0.8±0.1	3.0± 0.2	0.41±0.07
GeAnayet	2.183	714±3	3.8±0.2	1.7±0.1	0.38±0.07
GeTobazo	2.185	708±3	4.0±0.2	1.3±0.1	0.40±0.06
GeLatuca	2.187	710±3	3.3±0.2	5.9±0.3	0.56±0.08
Paquito	1	79±2	0.27±0.09	0.5±0.1	0.25±0.09

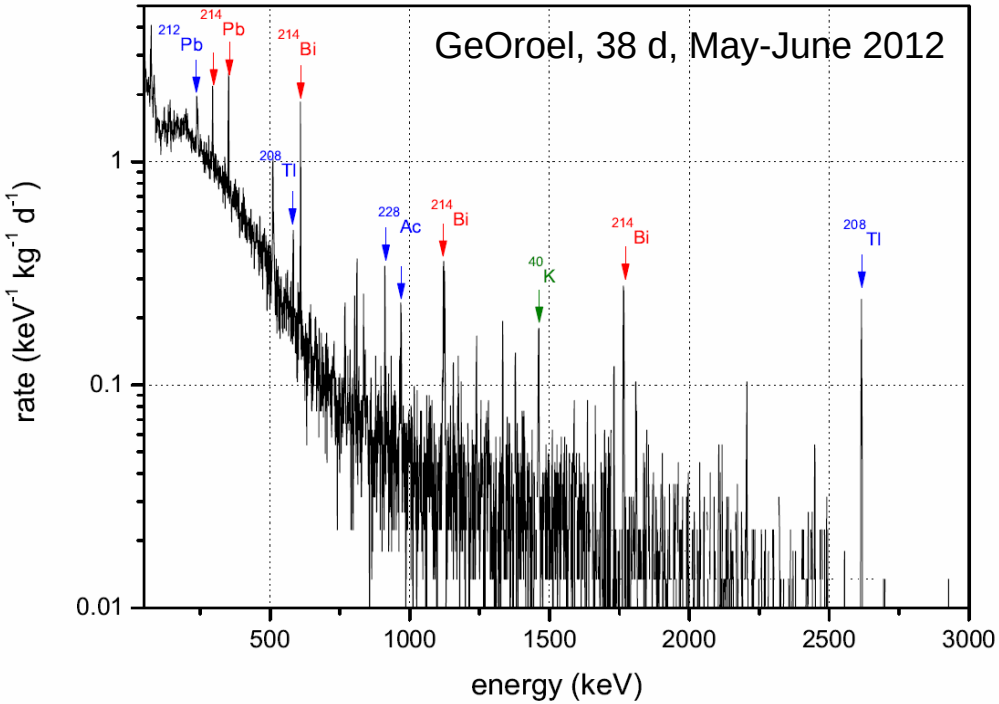

Techniques and equipment

- **Ge gamma-ray spectrometry**
  - **Detection efficiency**
    - Evaluated for each sample using GEANT4 simulations
    - Simulation environment validated by comparing with the measured efficiency curve using a reference ^{152}Eu source at 25 cm

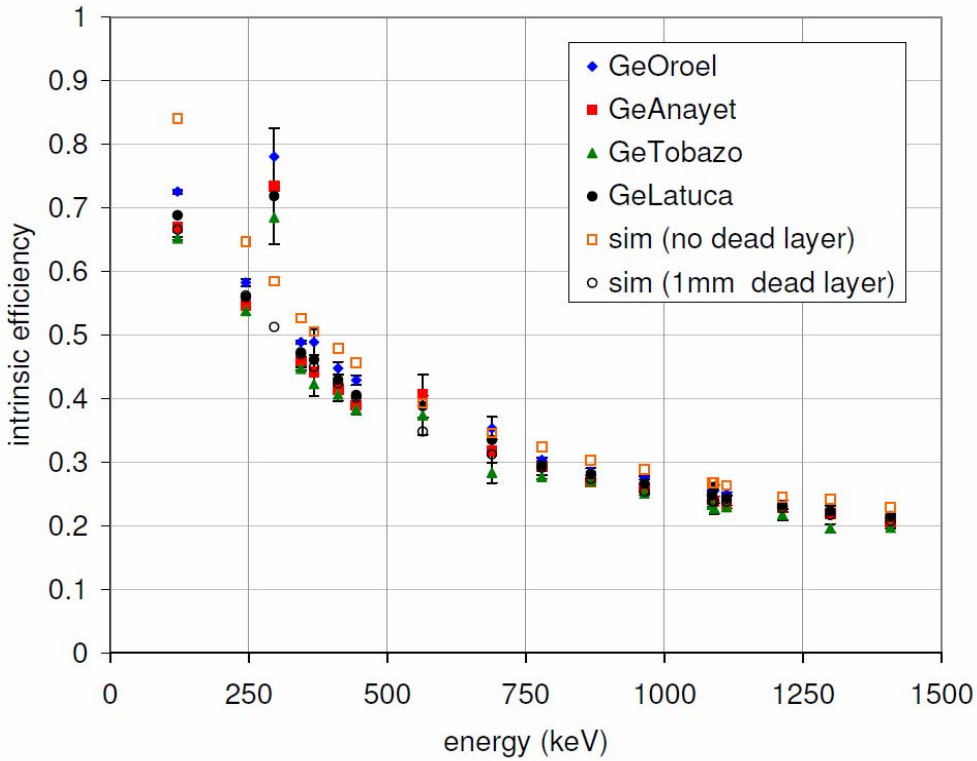

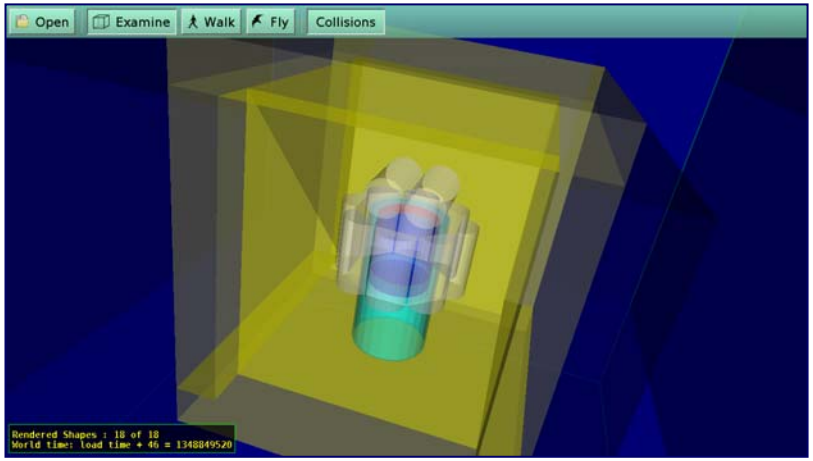

Overall uncertainty of 10% is considered for the simulated detection efficiency

Radiopurity control in the NEXT-100 double beta decay experiment

- ✓ NEXT experiment
- ✓ Techniques and equipment
- ✓ **Measurements and results**
  - Shielding
  - Vessel
  - Electroluminescence (EL) and HV components
  - Tracking readout plane
  - Energy readout plane
- ✓ **Summary and outlook**

Low Radioactivity Techniques 2013

S. Cebrián
(on behalf of NEXT Collaboration and LSC Radiopurity Service)

LSC Laboratorio Subterráneo de Canfranc

Universidad Zaragoza 1542

Measurements and results

Material, Supplier	# in table 3	Detector	Sample size	Screening time (d)
Pb, Tecnibusa	5	GeAnayet	5585 g	19.44
Pb, Tecnibusa	6	GeAnayet	5585 g	35.99
Cu, Luvata	10	Paquito	681 g	39.17
Ti, SMP	11	GeOroel	121 g	38.46
Ti, SMP	12	GeTobazo	121 g	43.11
Ti, Ti Metal Supply	13	GeOroel	1804 g	47.23
304L Stainless Steel, Pfeiffer	14	Paquito	347 g	19.55
316Ti Stainless Steel, 10 mm, Nironit	15	GeTobazo	7684 g	33.00
316Ti Stainless Steel, 15 mm, Nironit	16	GeTobazo	10205 g	35.61
316Ti Stainless Steel, 50 mm, Nironit	17	GeAnayet	4816 g	34.72
Inconel 625, Mecanizados Kanter	18	GeTobazo	1004 g	27.98
Inconel 718, Mecanizados Kanter	19	GeOroel	611 g	27.93
PEEK, Sanmetal	20	Paquito	459 g	24.27
Polyethylene, IN2 Plastics	21	GeAnayet	1315 g	36.76
Semitron ES225, Quadrant EPP	22	GeOroel	1618 g	35.05
SMD resistor, Farnell	23	Paquito	50 pc	18.15
SM5D resistor, Finechem	24	Paquito	100 pc	31.45
Kapton-Cu PCB, LabCircuits	25	Paquito	260.15 cm^2	35.28
Cuflon, Polyflon	26	GeOroel	1876 g	24.29
Bonding films, Polyflon	27	GeAnayet	288 g	30.83
FFC/FCP connector, Hirose	28	Paquito	19 pc (1.23 g/pc)	6.83
P5K connector, Panasonic	29	Paquito	15 pc (0.67 g/pc)	7.58
Thermoplastic connector, Molex	30	GeLatuca	29 pc (0.53 g/pc)	17.20
Solder paste, Multicore	31	GeLatuca	457 g	44.30
Solder wire, Multicore	32	Paquito	91 g	7.74
Ta capacitor, Vishay Sprague	33	GeAnayet	277 pc (0.64 g/pc)	17.97

- New measurements:

Material, Supplier	Detector	Sample size	Screening time (d)
TIG-MIG welding on Nironit 316Ti stainless steel, Movesa	GeLatuca	1048.1 g	48.93
Kynar (=PVDF), Boedeker	GeLatuca	1870.3 g	51.55
Tefzel (=ETFE) HV feedtrough	GeTobazo	239.7 g	43.89
Dice Boards, Pyrecap	GeOroel	140 g	45.11
Sapphire, Precision Sapphire Technologies	GeAnayet	526.6 g	44.94
PMT, Hamamatsu R11410MOD	GeAnayet	1 unit	33.70

Radiopurity control in the NEXT-100 double beta decay experiment: procedures and initial measurements
V. Alvarez et al, 2013 JINST 8 T01002

Results: **shielding**

Passive shield:

- External 20-cm-thick Pb
- Internal 12-cm-thick Cu

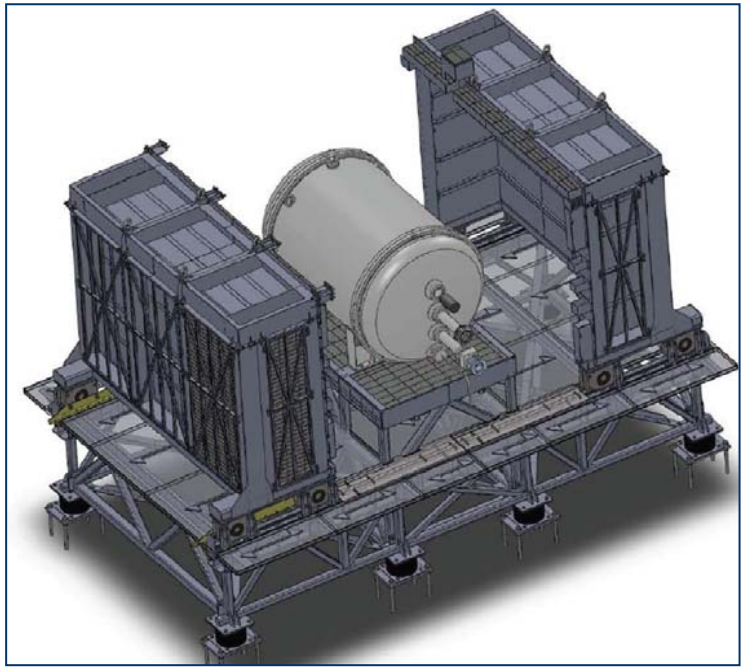

#	Material	Supplier	Technique	Unit	^{238}U	^{226}Ra	^{232}Th	^{228}Th	^{235}U	^{40}K	^{60}Co	^{137}Cs
	Shielding											
1	Pb	Cometa	GDMS	mBq/kg	0.37		0.073			<0.31		
2	Pb	Mifer	GDMS	mBq/kg	<1.2		<0.41			0.31		
3	Pb	Mifer	GDMS	mBq/kg	0.33		0.10			1.2		
4	Pb	Tecnibusa	GDMS	mBq/kg	0.73		0.14			0.91		
5	Pb	Tecnibusa	Ge	mBq/kg	<94	<2.0	<3.8	<4.4	<30	<2.8	<0.2	<0.8
6	Pb	Tecnibusa	Ge	mBq/kg	<57	<1.9	<1.7	<2.8	<22	<1.7	<0.1	<0.5
7	Cu (ETP)	Sanmetal	GDMS	mBq/kg	<0.062		<0.020					
8	Cu (C10100)	Luvata (hot rolled)	GDMS	mBq/kg	<0.012		<0.0041			0.061		
9	Cu (C10100)	Luvata (cold rolled)	GDMS	mBq/kg	<0.012		<0.0041			0.091		
10	Cu (C10100)	Luvata (hot+cold rolled)	Ge	mBq/kg		<7.4	<0.8	<4.3		<18	<0.8	<1.2

Results: **vessel**

Pressure vesel:

- To hold 15 b, diameter 1.4 m, length 2.3 m
- Cylindrical center section + two torispherical heads on each end
- Made of stainless steel, even if first option was titanium

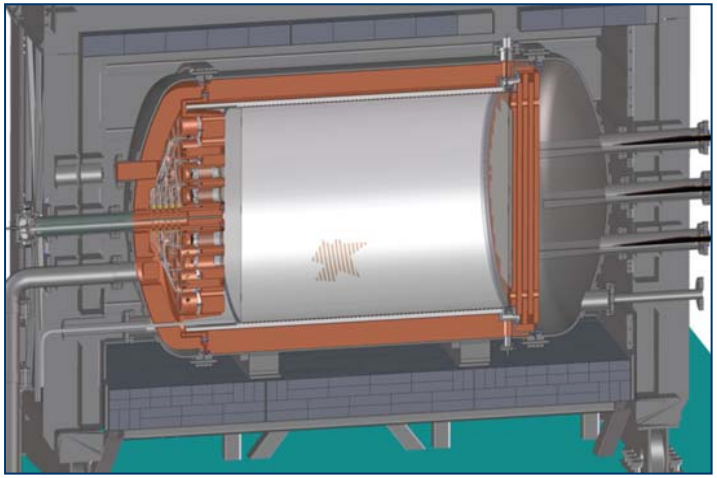

#	Material	Supplier	Technique	Unit	^{238}U	^{226}Ra	^{232}Th	^{228}Th	^{235}U	^{40}K	^{60}Co	^{137}Cs
	Vessel											
11	Ti	SMP	Ge	mBq/kg	<233	<5.7	<8.8	<9.5	3.4±1.0	<22	<3.3	<5.2
12	Ti	SMP	Ge	mBq/kg	<361	<6.6	<11	<10	<8.0	<15	<1.0	<1.8
13	Ti	Ti Metal Supply	Ge	mBq/kg	<14	<0.22	<0.5	3.6±0.2	0.43±0.08	<0.6	<0.07	<0.07
14	304L SS	Pfeiffer	Ge	mBq/kg		14.3±2.8	9.7±2.3	16.2±3.9	3.2±1.1	<17	11.3±2.7	<1.6
15	316Ti SS	Nironit, 10-mm-thick	Ge	mBq/kg	<21	<0.57	<0.59	<0.54	<0.74	<0.96	2.8±0.2	<0.12
16	316Ti SS	Nironit, 15-mm-thick	Ge	mBq/kg	<25	<0.46	<0.69	<0.88	<0.75	<1.0	4.4±0.3	<0.17
17	316Ti SS	Nironit, 50-mm-thick	Ge	mBq/kg	67±22	<1.7	2.1±0.4	2.0±0.7	2.4±0.6	<2.5	4.2±0.3	<0.6
18	Inconel 625	Mecanizados Kanter	Ge	mBq/kg	<120	<1.9	<3.4	<3.2	<4.6	<3.9	<0.4	<0.6
19	Inconel 718	Mecanizados Kanter	Ge	mBq/kg	309±78	<3.4	<5.1	<4.4	15.0±1.9	<13	<1.4	<1.3

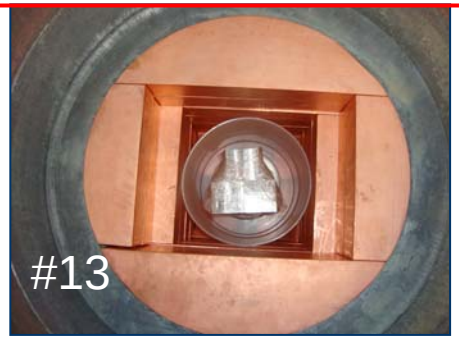

Results: **vessel**

#	Material	Supplier	Technique	Unit	^{238}U	^{226}Ra	^{232}Th	^{228}Th	^{235}U	^{40}K	^{60}Co	^{137}Cs
	Vessel											
11	Ti	SMP	Ge	mBq/kg	<233	<5.7	<8.8	<9.5	3.4±1.0	<22	<3.3	<5.2
12	Ti	SMP	Ge	mBq/kg	<361	<6.6	<11	<10	<8.0	<15	<1.0	<1.8
13	Ti	Ti Metal Supply	Ge	mBq/kg	<14	<0.22	<0.5	3.6±0.2	0.43±0.08	<0.6	<0.07	<0.07
14	304L SS	Pfeiffer	Ge	mBq/kg		14.3±2.8	9.7±2.3	16.2±3.9	3.2±1.1	<17	11.3±2.7	<1.6
15	316Ti SS	Nironit, 10-mm-thick	Ge	mBq/kg	<21	<0.57	<0.59	<0.54	<0.74	<0.96	2.8±0.2	<0.12
16	316Ti SS	Nironit, 15-mm-thick	Ge	mBq/kg	<25	<0.46	<0.69	<0.88	<0.75	<1.0	4.4±0.3	<0.17
17	316Ti SS	Nironit, 50-mm-thick	Ge	mBq/kg	67±22	<1.7	2.1±0.4	2.0±0.7	2.4±0.6	<2.5	4.2±0.3	<0.6
18	Inconel 625	Mecanizados Kanter	Ge	mBq/kg	<120	<1.9	<3.4	<3.2	<4.6	<3.9	<0.4	<0.6
19	Inconel 718	Mecanizados Kanter	Ge	mBq/kg	309±78	<3.4	<5.1	<4.4	15.0±1.9	<13	<1.4	<1.3

- New measurements:

Material	Supplier	Technique	Unit	^{238}U	^{226}Ra	^{232}Th	^{228}Th	^{235}U	^{40}K	^{60}Co	^{137}Cs
TIG-MIG welding on 316Ti SS	Nironit (SS), Movesa	Ge	mBq/cm	< 7.3	< 0.11	< 0.32	< 0.21		0.86 ± 0.14		

Results: **EL & HV components**

Field cage:

- Using copper rings connected to resistors and HD polyethylene as insulator
- Wire meshes separating the different field regions will be made of stainless steel

Reflector panels:

- Made of PTFE Tetratex fixed over a 3M substrate
- Coated with a wavelength shifter (TPB)

#	Material	Supplier	Technique	Unit	^{238}U	^{226}Ra	^{232}Th	^{228}Th	^{235}U	^{40}K	^{60}Co	^{137}Cs
	HV, EL components											
20	PEEK	Sanmetal	Ge	mBq/kg		36.3±4.3	14.9±5.3	11.0±2.4	<7.8	8.3±3.0	<3.3	<2.6
21	Polyethylene	IN2 Plastics	Ge	mBq/kg	<140	<1.9	<3.8	<2.7	<1.0	<8.9	<0.5	<0.5
22	Semitron ES225	Quadrant EPP	Ge	mBq/kg	<101	<2.3	<2.0	<1.8	1.8±0.3	513±52	<0.5	<0.6
23	SMD resistor	Farnell	Ge	mBq/pc	2.3±1.0	0.16±0.03	0.30±0.06	0.30±0.05	<0.05	0.19±0.08	<0.02	<0.03
24	SM5D resistor	Finechem	Ge	mBq/pc	0.4±0.2	0.022±0.007	<0.023	<0.016	0.012±0.005	0.17±0.07	<0.005	<0.005

Results: **EL & HV components**

#	Material	Supplier	Technique	Unit	^{238}U	^{226}Ra	^{232}Th	^{228}Th	^{235}U	^{40}K	^{60}Co	^{137}Cs
	HV, EL components											
20	PEEK	Sanmetal	Ge	mBq/kg		36.3±4.3	14.9±5.3	11.0±2.4	<7.8	8.3±3.0	<3.3	<2.6
21	Polyethylene	IN2 Plastics	Ge	mBq/kg	<140	<1.9	<3.8	<2.7	<1.0	<8.9	<0.5	<0.5
22	Semitron ES225	Quadrant EPP	Ge	mBq/kg	<101	<2.3	<2.0	<1.8	1.8±0.3	513±52	<0.5	<0.6
23	SMD resistor	Farnell	Ge	mBq/pc	2.3±1.0	0.16±0.03	0.30±0.06	0.30±0.05	<0.05	0.19±0.08	<0.02	<0.03
24	SM5D resistor	Finechem	Ge	mBq/pc	0.4±0.2	0.022±0.007	<0.023	<0.016	0.012±0.005	0.17±0.07	<0.005	<0.005

- New measurements:

Material	Supplier	Technique	Unit	^{238}U	^{226}Ra	^{232}Th	^{228}Th	^{235}U	^{40}K	^{60}Co	^{137}Cs
Kynar=PVDF	Boedeker	Ge	mBq/kg	< 96	< 1.4	< 2.7	< 1.8	<0.68	41.5 ± 4.6	< 0.29	< 0.35
Tefzel (=ETFE) HV feedtrough		Ge	mBq/kg	< 566	< 5.7	< 14	< 9.2	< 3.6	< 30	< 1.2	< 1.7

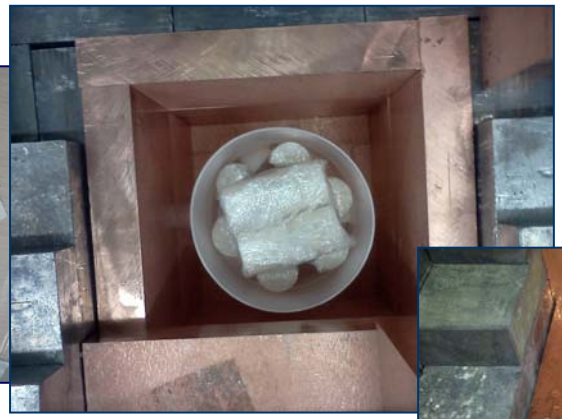

Results: **tracking readout**

Tracking readout plane:

- Array of 110 “Dice Boards” (DB), behind the EL region
- Each DB contains 8x8 SiPM sensors with a pitch of ~1 cm and is coated with TPB

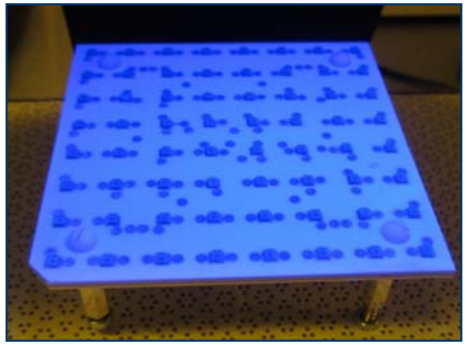

#	Material	Supplier	Technique	Unit	^{238}U	^{226}Ra	^{232}Th	^{228}Th	^{235}U	^{40}K	^{60}Co	^{137}Cs
	Energy, tracking planes											
25	Kapton-Cu PCB	LabCircuits	Ge	mBq/cm^2	<0.26	<0.014	<0.012	<0.008	<0.002	<0.040	<0.002	<0.002
26	Cuflon	Polyflon	Ge	mBq/kg	<33	<1.3	<1.1	<1.1	<0.6	4.8±1.1	<0.3	<0.3
27	Bonding films	Polyflon	Ge	mBq/kg	1140±300	487±23	79.8±6.6	66.0±4.8	60.0±5.5	832 ±87	<4.4	<3.8
28	FFC/FCP connector	Hirose	Ge	mBq/pc	<50	4.6±0.7	6.5±1.2	6.4±1.0	<0.75	3.9±1.4	<0.2	<0.5
29	P5K connector	Panasonic	Ge	mBq/pc	<42	6.0±0.9	9.5±1.7	9.4±1.4	<0.95	4.1±1.5	<0.2	<0.8
30	Thermopl. connector	Molex	Ge	mBq/pc	<7.3	1.77±0.08	3.01±0.19	2.82±0.15	<0.31	2.12±0.25	<0.022	0.27±0.03
31	Solder paste	Multicore	Ge	mBq/kg	<310	<4.9	<8.0	<6.0	<5.2	<13	<1.0	<1.6
32	Solder wire	Multicore	Ge	mBq/kg	<4900	(7.7±1.2)10^2	<147	<14		<257	<30	<36
33	Ta capacitor	Vishay Sprague	Ge	mBq/pc	<0.8	0.043±0.003	0.034±0.004	0.032±0.003	< 0.010		<0.002	<0.003

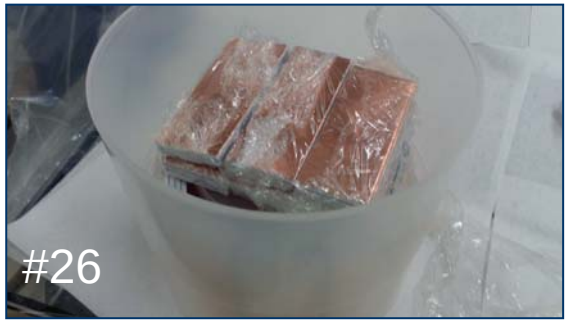

Material	Supplier	Technique	Unit	^{238}U	^{226}Ra	^{232}Th	^{228}Th	^{235}U	^{40}K	^{60}Co	^{137}Cs
Dice Boards	Pyrecap	Ge	mBq/DB	< 7.6	0.28±0.08	< 0.28	< 0.25	< 0.13	< 1.2	< 0.07	< 0.06

Results: **tracking readout**

#	Material	Supplier	Technique	Unit	^{238}U	^{226}Ra	^{232}Th	^{228}Th	^{235}U	^{40}K	^{60}Co	^{137}Cs
	Energy, tracking planes											
25	Kapton-Cu PCB	LabCircuits	Ge	mBq/cm^2	<0.26	<0.014	<0.012	<0.008	<0.002	<0.040	<0.002	<0.002
26	Cuflon	Polyflon	Ge	mBq/kg	<33	<1.3	<1.1	<1.1	<0.6	4.8±1.1	<0.3	<0.3
27	Bonding films	Polyflon	Ge	mBq/kg	1140±300	487±23	79.8±6.6	66.0±4.8	60.0±5.5	832±87	<4.4	<3.8
28	FFC/FCP connector	Hirose	Ge	mBq/pc	<50	4.6±0.7	6.5±1.2	6.4±1.0	<0.75	3.9±1.4	<0.2	<0.5
29	P5K connector	Panasonic	Ge	mBq/pc	<42	6.0±0.9	9.5±1.7	9.4±1.4	<0.95	4.1±1.5	<0.2	<0.8
30	Thermopl. connector	Molex	Ge	mBq/pc	<7.3	1.77±0.08	3.01±0.19	2.82±0.15	<0.31	2.12±0.25	<0.022	0.27±0.03
31	Solder paste	Multicore	Ge	mBq/kg	<310	<4.9	<8.0	<6.0	<5.2	<13	<1.0	<1.6
32	Solder wire	Multicore	Ge	mBq/kg	<4900	(7.7±1.2)10^2	<147	<14		<257	<30	<36
33	Ta capacitor	Vishay Sprague	Ge	mBq/pc	<0.8	0.043±0.003	0.034±0.004	0.032±0.003	< 0.010		<0.002	<0.003

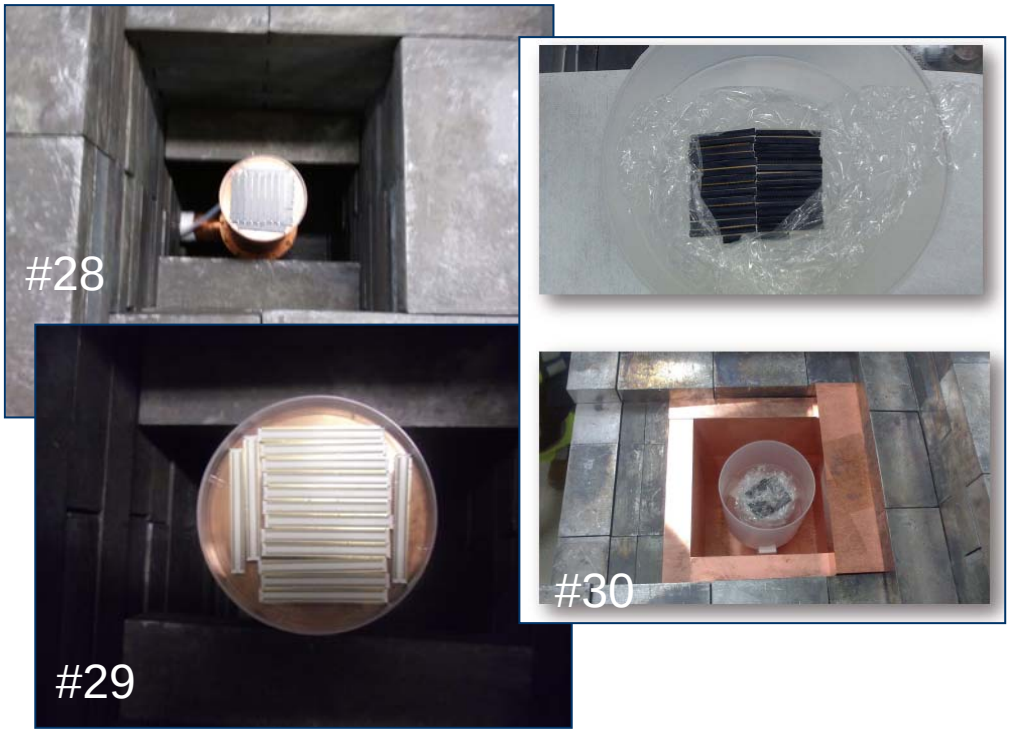

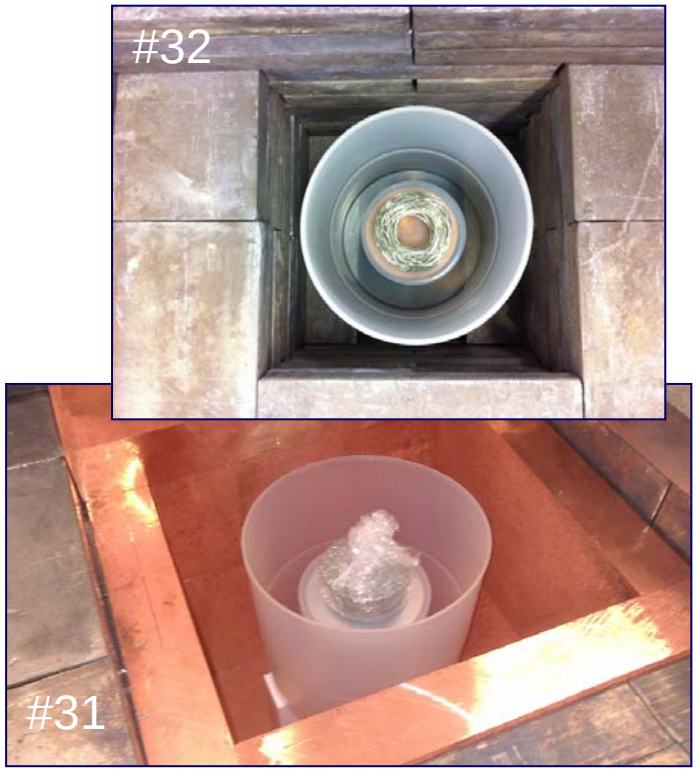

Results: **tracking readout**

#	Material	Supplier	Technique	Unit	^{238}U	^{226}Ra	^{232}Th	^{228}Th	^{235}U	^{40}K	^{60}Co	^{137}Cs
	Energy, tracking planes											
25	Kapton-Cu PCB	LabCircuits	Ge	mBq/cm^2	<0.26	<0.014	<0.012	<0.008	<0.002	<0.040	<0.002	<0.002
26	Cuflon	Polyflon	Ge	mBq/kg	<33	<1.3	<1.1	<1.1	<0.6	4.8±1.1	<0.3	<0.3
27	Bonding films	Polyflon	Ge	mBq/kg	1140±300	487±23	79.8±6.6	66.0±4.8	60.0±5.5	832 ±87	<4.4	<3.8
28	FFC/FCP connector	Hirose	Ge	mBq/pc	<50	4.6±0.7	6.5±1.2	6.4±1.0	<0.75	3.9±1.4	<0.2	<0.5
29	P5K connector	Panasonic	Ge	mBq/pc	<42	6.0±0.9	9.5±1.7	9.4±1.4	<0.95	4.1±1.5	<0.2	<0.8
30	Thermopl. connector	Molex	Ge	mBq/pc	<7.3	1.77±0.08	3.01±0.19	2.82±0.15	<0.31	2.12±0.25	<0.022	0.27±0.03
31	Solder paste	Multicore	Ge	mBq/kg	<310	<4.9	<8.0	<6.0	<5.2	<13	<1.0	<1.6
32	Solder wire	Multicore	Ge	mBq/kg	<4900	$(7.7\pm1.2)10^2$	<147	<14		<257	<30	<36
33	Ta capacitor	Vishay Sprague	Ge	mBq/pc	<0.8	0.043±0.003	0.034±0.004	0.032±0.003	< 0.010		<0.002	<0.003

- Future measurements:
  - Final DB including TPB coating
  - Flat cables
  - NTC sensors

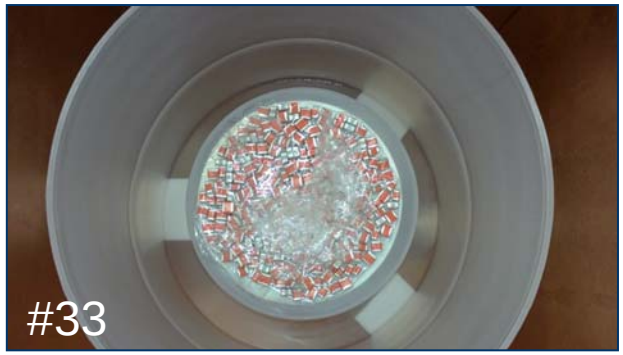

Results: **energy readout**

Energy readout plane:

- Array of 60 Hamamatsu R11410MOD PMTs behind the cathode to detect EL light and primary scintillation light
- Each PMT sealed into individual, pressure resistant Cu enclosures, coupled to the sensitive volume through a sapphire window coated with TPB.

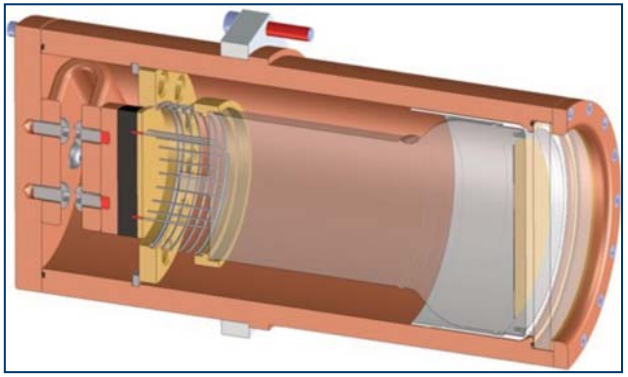

Material	Supplier	Technique	Unit	^{238}U	^{226}Ra	^{232}Th	^{228}Th	^{235}U	^{40}K	^{60}Co	^{137}Cs
Sapphire windows	Precision Sapphire Technologies	Ge	mBq/kg	< 275	< 2.7	< 7.6	< 5.5	< 2.1	< 18	< 0.7	< 1.0
PMT R11410MOD	Hamamatsu	Ge	mBq/PMT	< 187	< 1.8	< 5.4	< 3.4	< 1.6	< 29	2.82 ± 0.27	< 0.6

PRELIMINARY!

➢ Future measurements: - PMTs
- PMT bases, copper cans

Summary and outlook

✓ A thorough radiopurity control is being performed for the NEXT-100 ββ experiment, based on mainly **ultra-low background Ge γ-ray spectrometry at LSC**.

- Adequate materials for external and internal passive shields identified
- The good radiopurity found for the 316Ti stainless steel confirmed this material for the detector vessel
- Selection of in-vessel components for energy and tracking planes has been performed too, helping in the design of DB
  - Resistors, capacitors and solder paste of acceptable radiopurity found
  - Board-to-cable connectors containing LCP discarded
  - Cuflon, being radiopure enough, chosen for DB

✓ Further radiopurity measurements at LSC are scheduled.

- Selection of photomultipliers of the chosen model
- Screening of related components (bases and cans) at the energy plane