SuperB – IFR

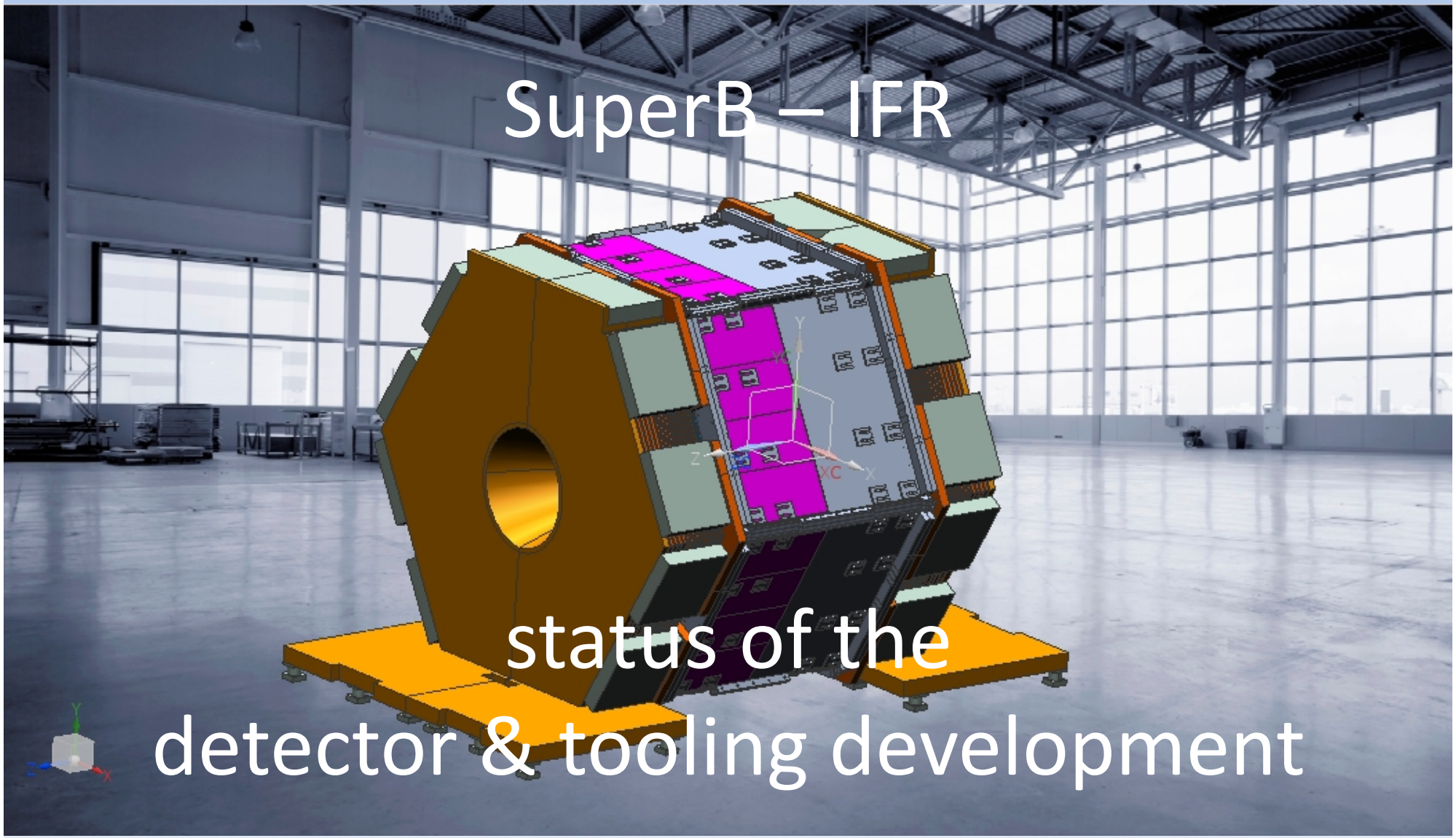

status of the detector & tooling development

OUTLINE

- Detector
  - Status of the design
- Tooling
  - Status of the development

STATUS OF THE DETECTOR DESIGN- 1

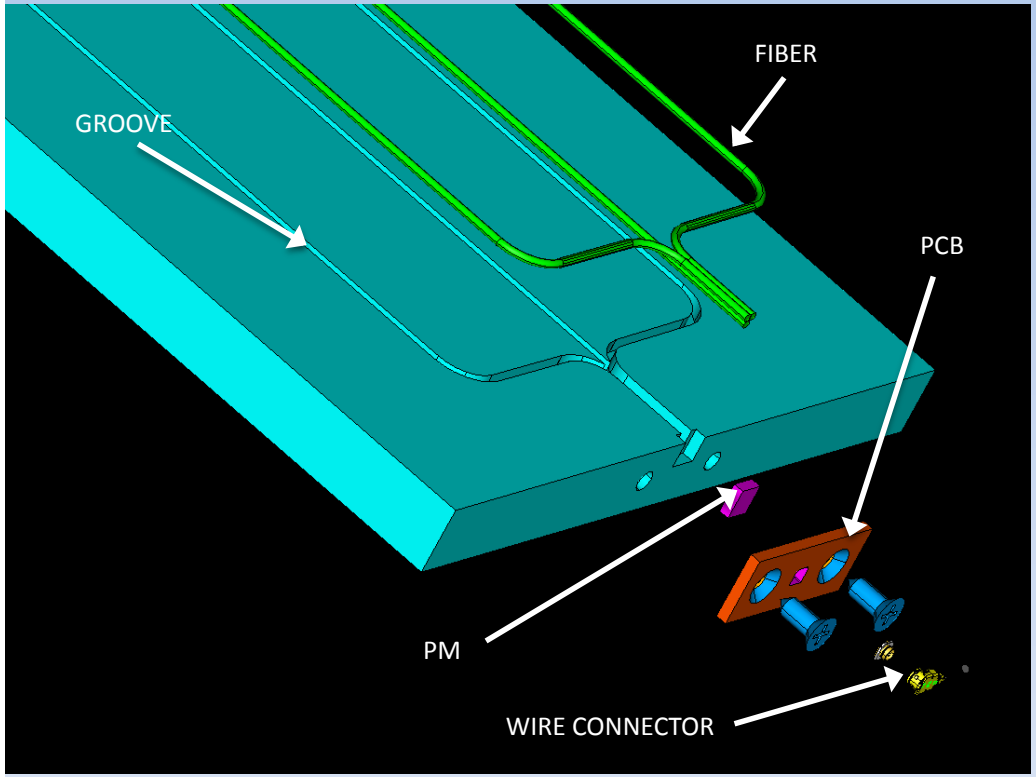

DETECTOR BASELINE

- Grooves in the scintillator accomodating the fibers
- The fibers coming from the scintillator are joined to the PM
- the signal coming from the PM is collected through a PCB and sent by an electrical wire

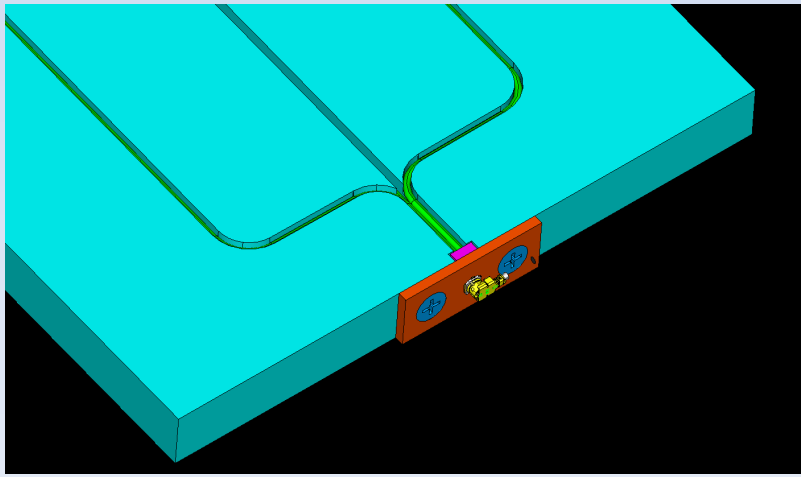

STATUS OF THE DETECTOR DESIGN- 2

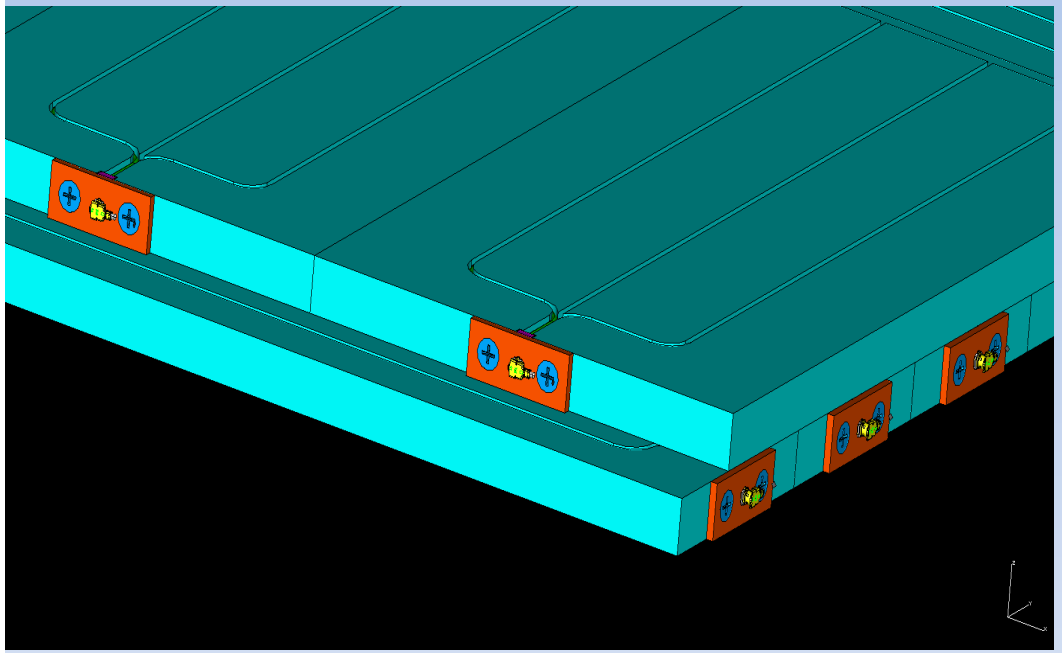

DETECTOR LAYOUT

- B A R R E L
  The longitudinal scintillators are 50 mm in width and 10 mm thick ; the transversal ones are 100 mm in width and 10 mm thick
- END CAPS
  Both the longitudinal and transversal scintillators are 50 mm in width and 10 mm thick

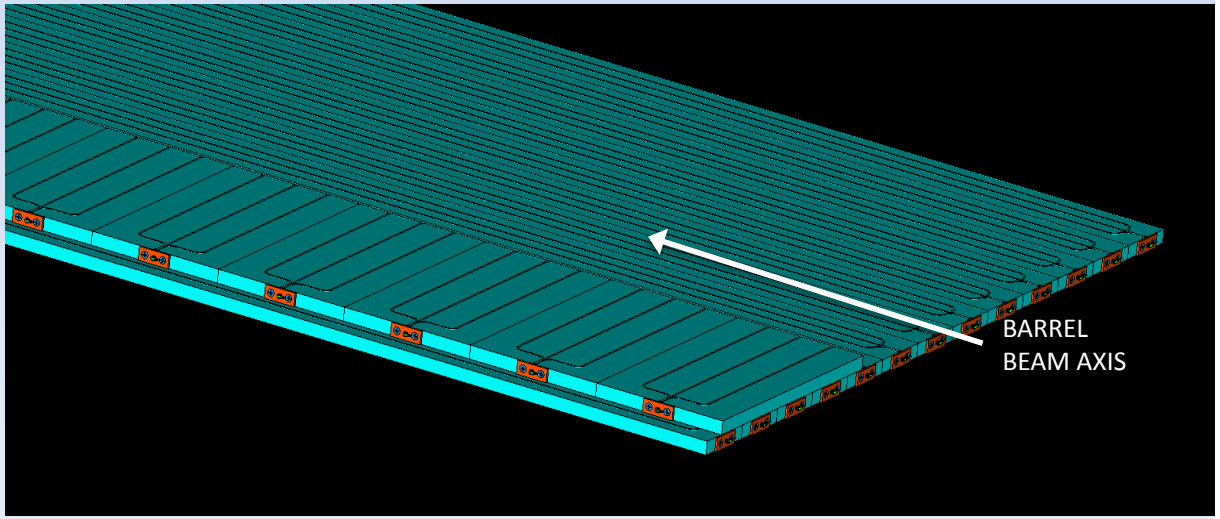

STATUS OF THE DETECTOR DESIGN- 3

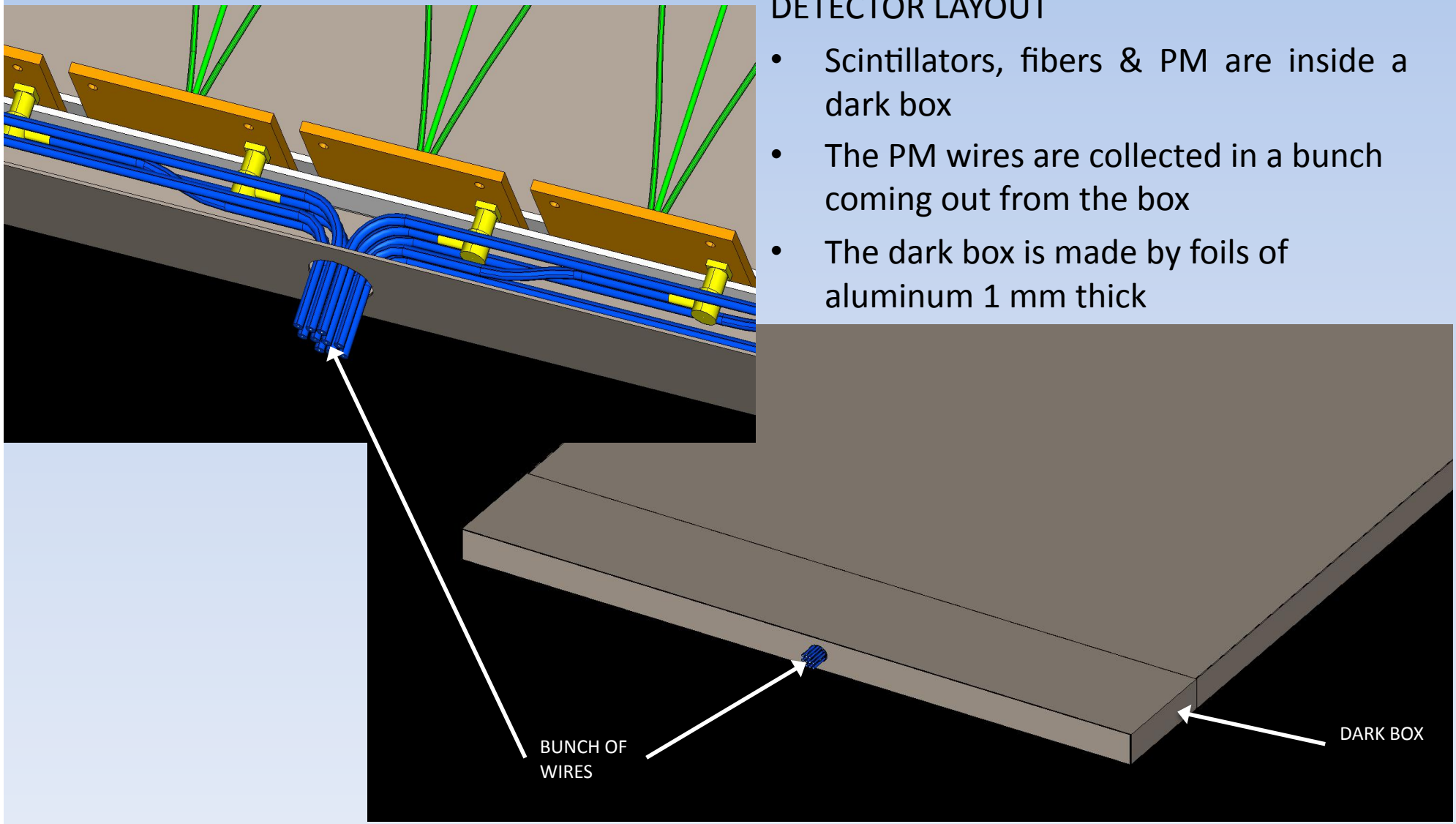

DETECTOR LAYOUT

- Scintillators, fibers & PM are inside a dark box
- The PM wires are collected in a bunch coming out from the box
- The dark box is made by foils of aluminum 1 mm thick

THE BARREL SEXTANT - 1

- Since now 9 layers of detector each sextant are foreseen
- Absorbers are foreseen into the gaps between the plates

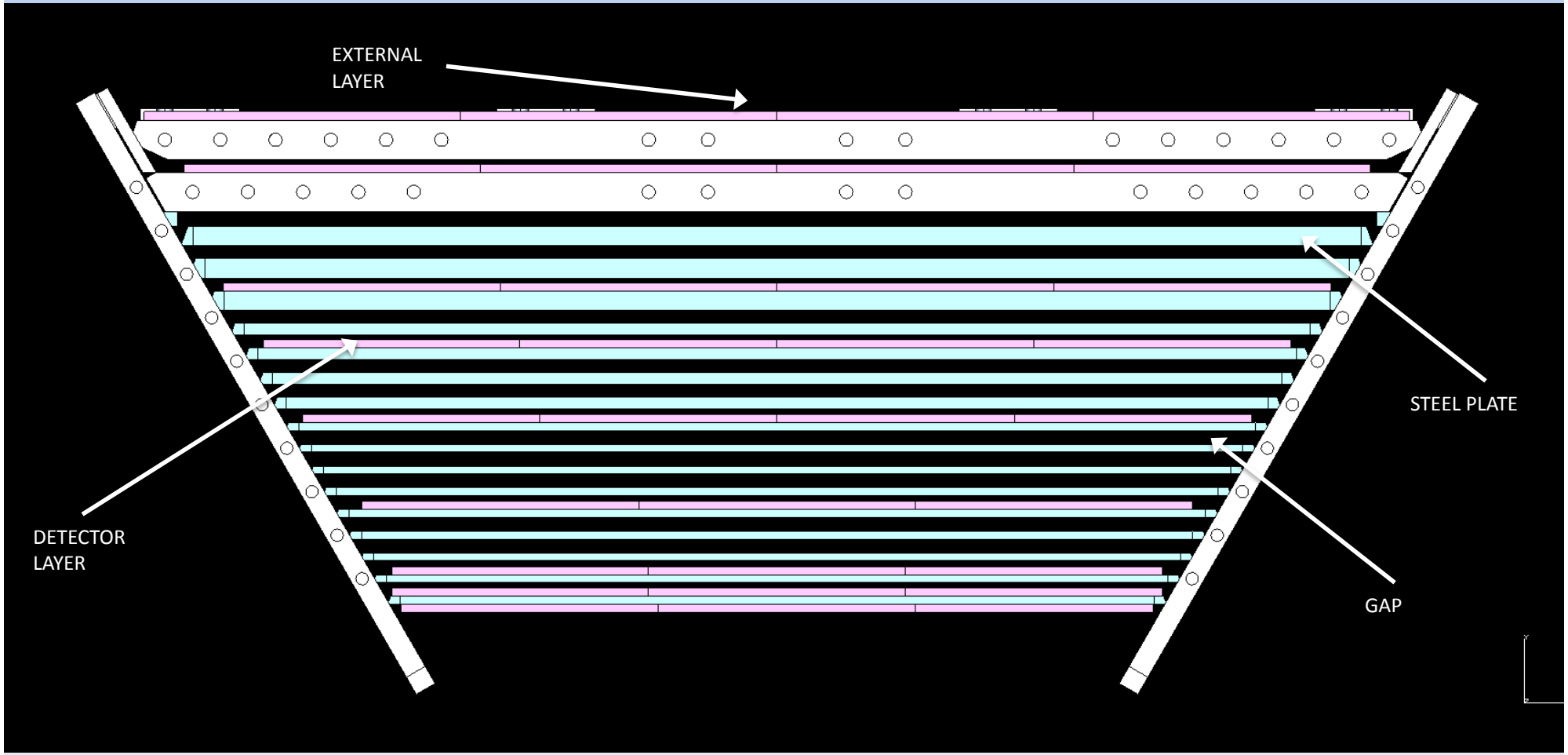

THE BARREL SEXTANT - 2

Is not yet clear how to accommodate the external layer

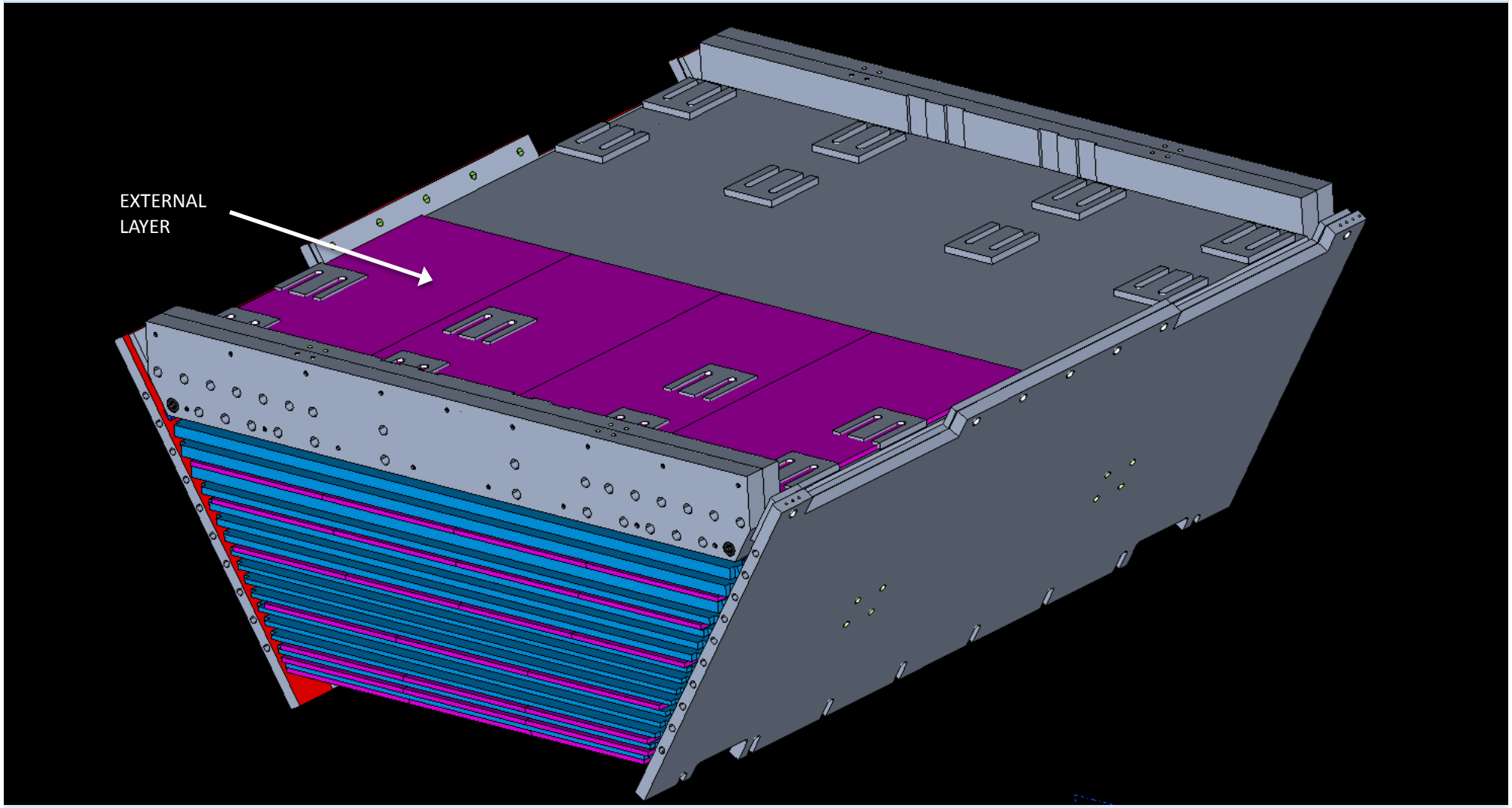

THE ASSEMBLED BARREL

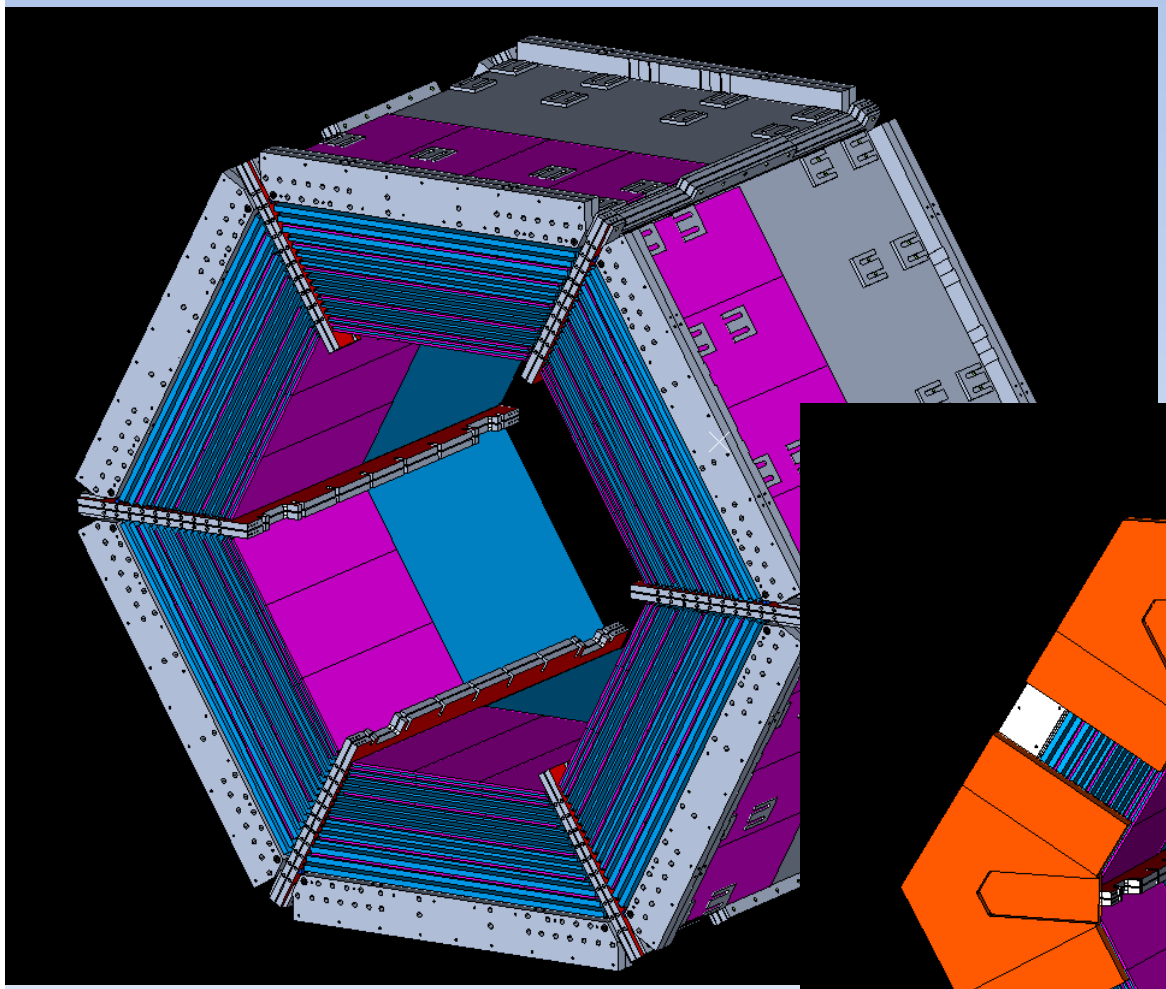

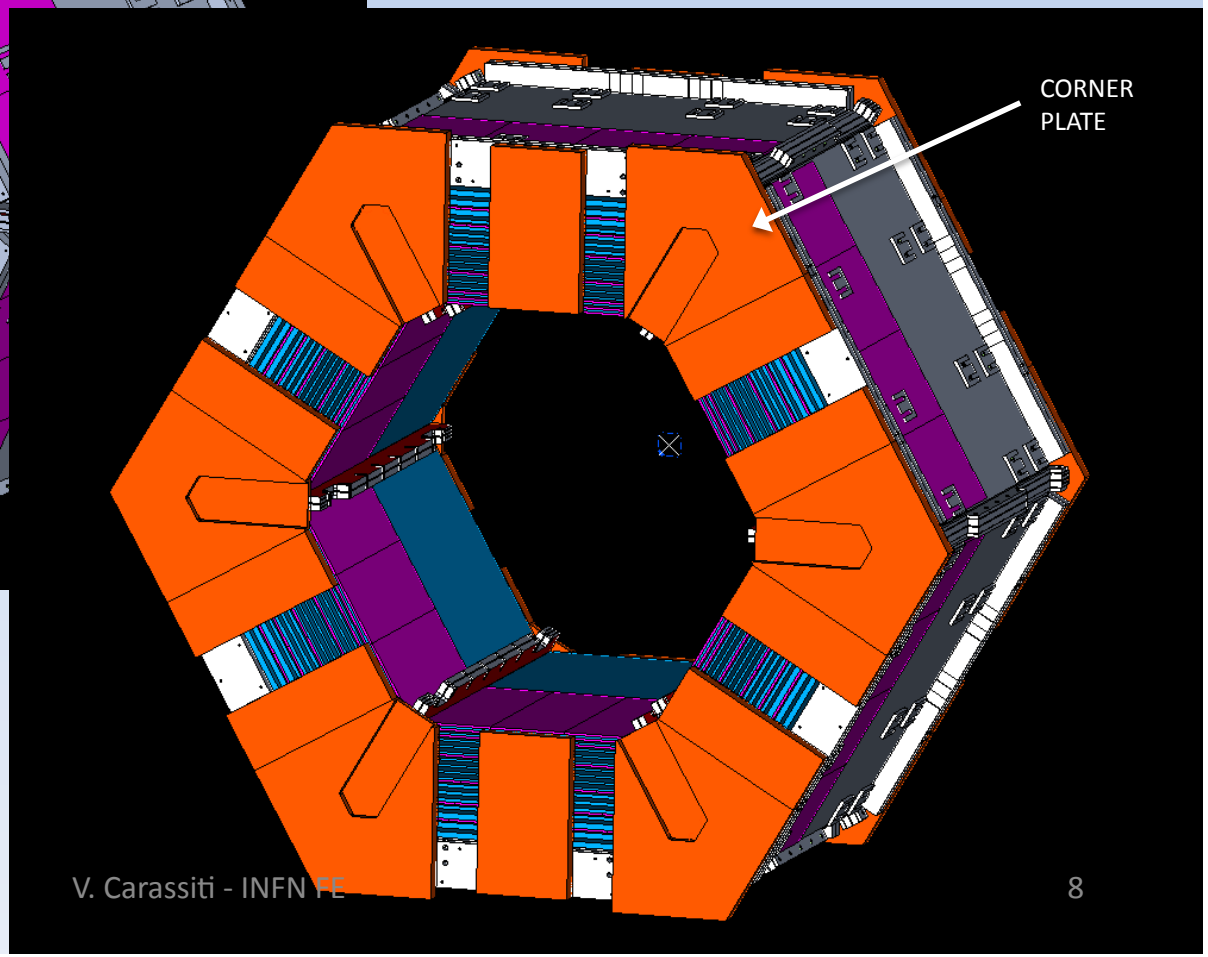

THE END CAPS - 1

- 17 detector layers are allowed ; number of layers TBD
- The hole of the forward end cap is conical shaped ; the hole of the backward end cap is cylindrical shaped
- The layers have to be splitted in three parts and follow the holes shape

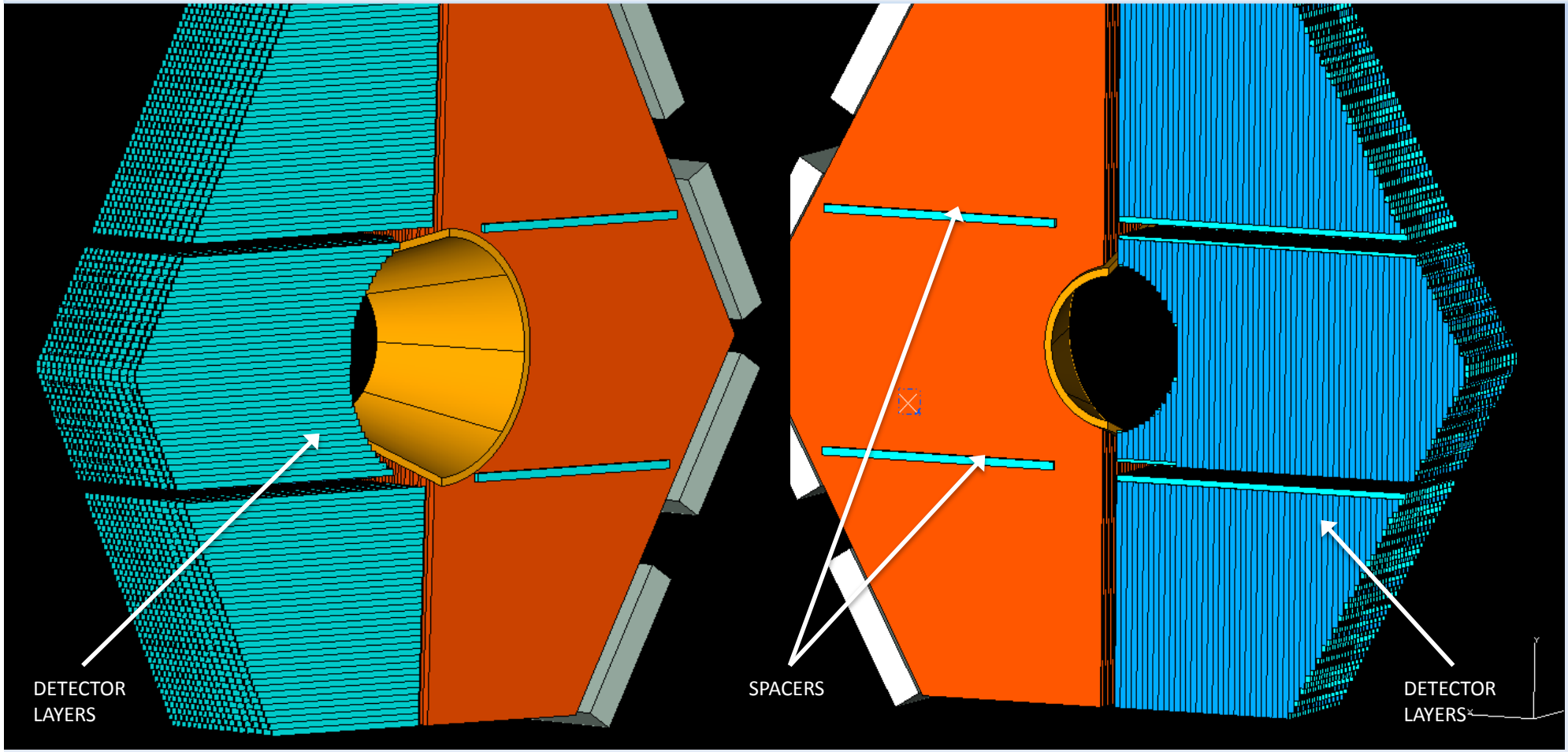

THE END CAPS - 2

- The detector layers of the backward end cap have to be shaped also following the cut giving the space for the cooling circuit

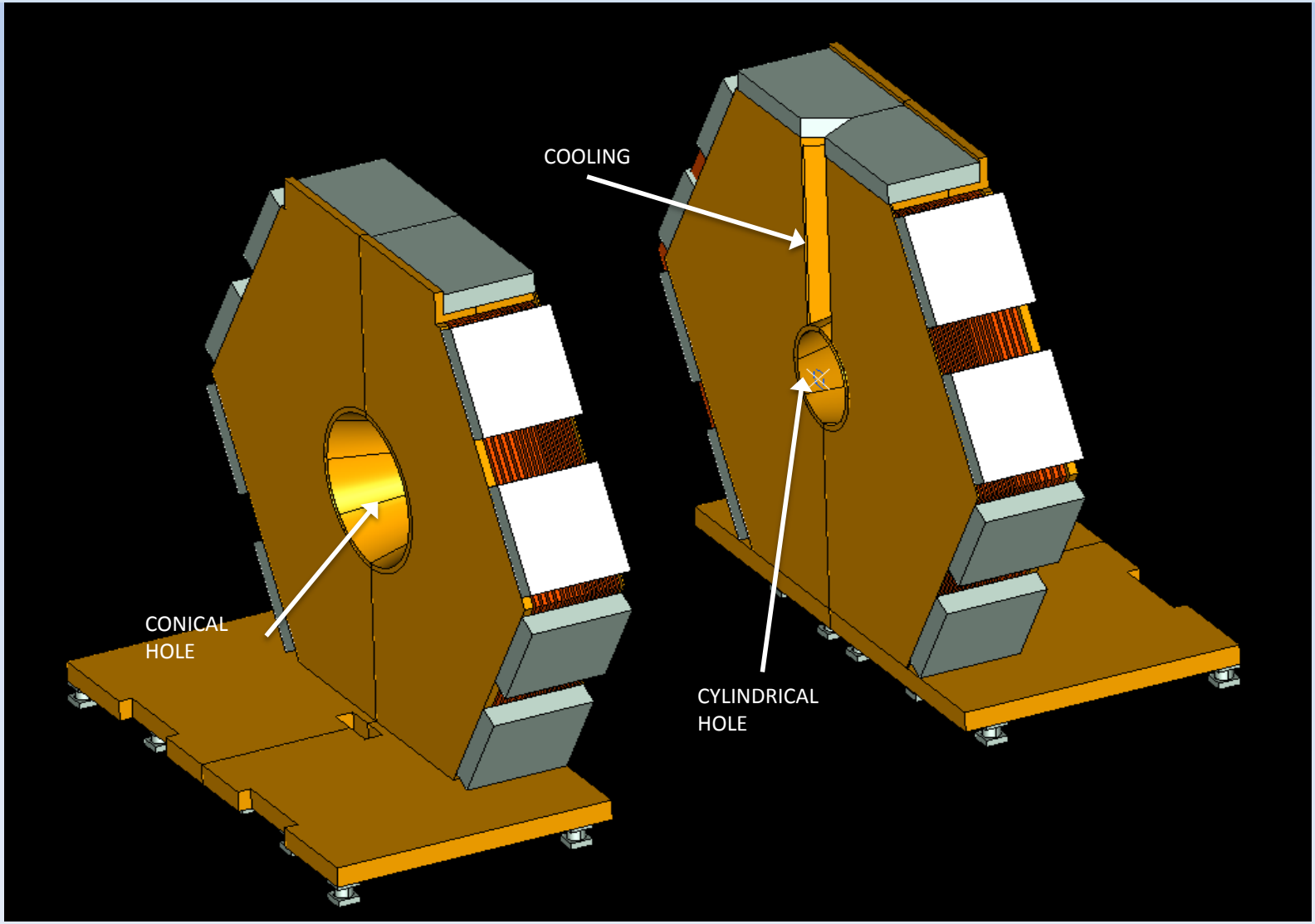

Status of the tooling development

- The tooling development regards :
  - Machine making the grooves housing the fibers
  - Machine dispensing the resin fixing the fibers

A production plan is needed (space, timing, labor, …..) including the quality control (and the tooling for it)

The toolings for the installation of the detector in the experimental area are also needed

Machine making the grooves

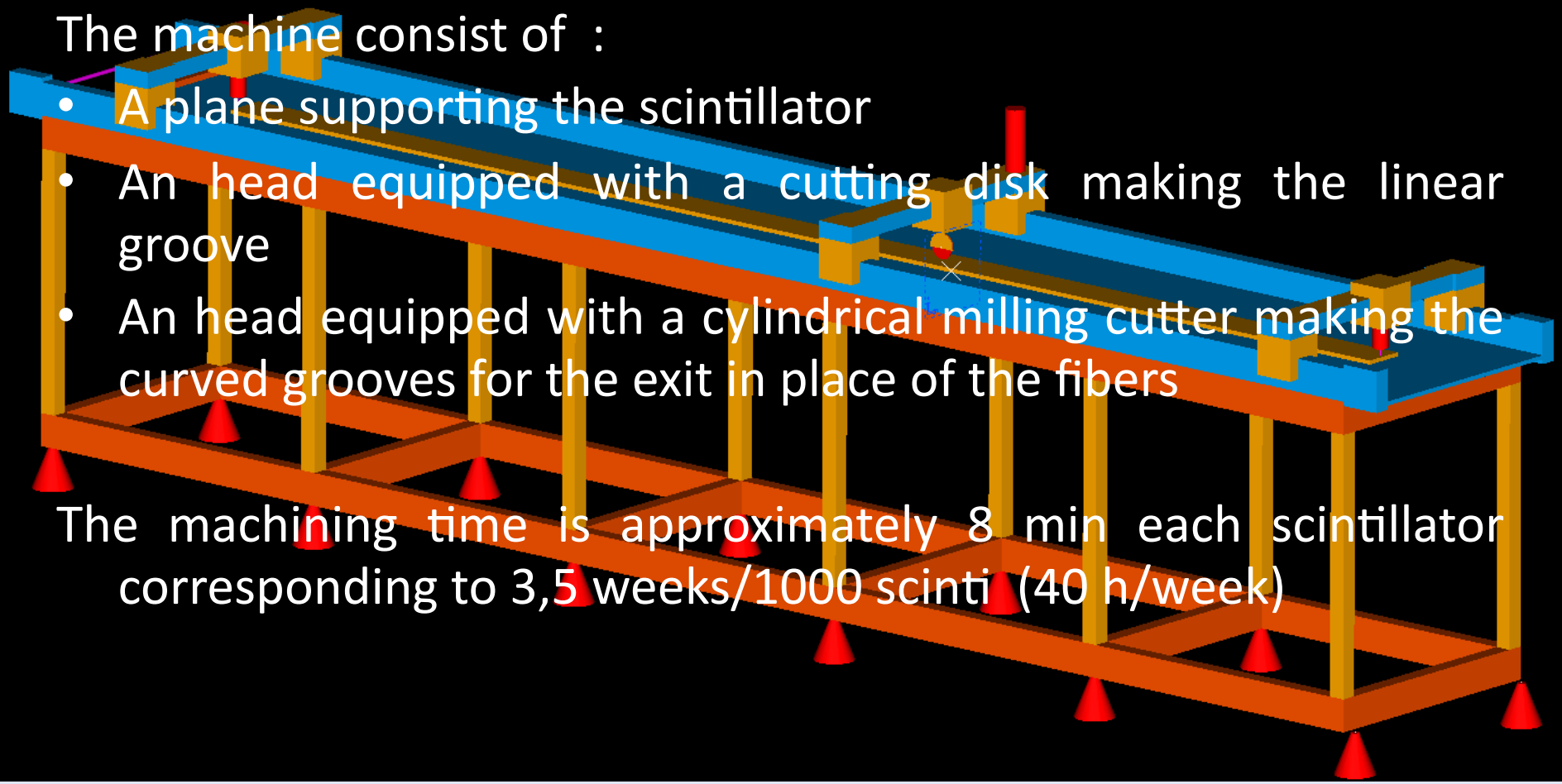

The machine consist of :

- A plane supporting the scintillator
- An head equipped with a cutting disk making the linear groove
- An head equipped with a cylindrical milling cutter making the curved grooves for the exit in place of the fibers

The machining time is approximately 8 min each scintillator corresponding to 3,5 weeks/1000 scinti (40 h/week)

Groove machine sketches (I)

CUTTING DISK

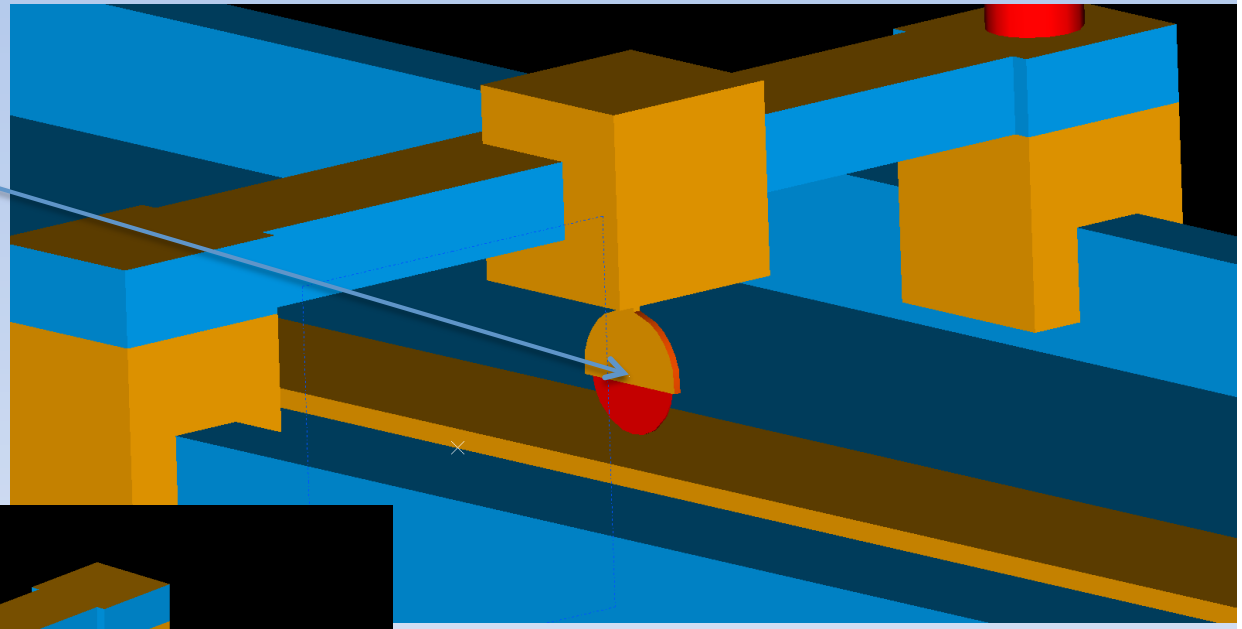

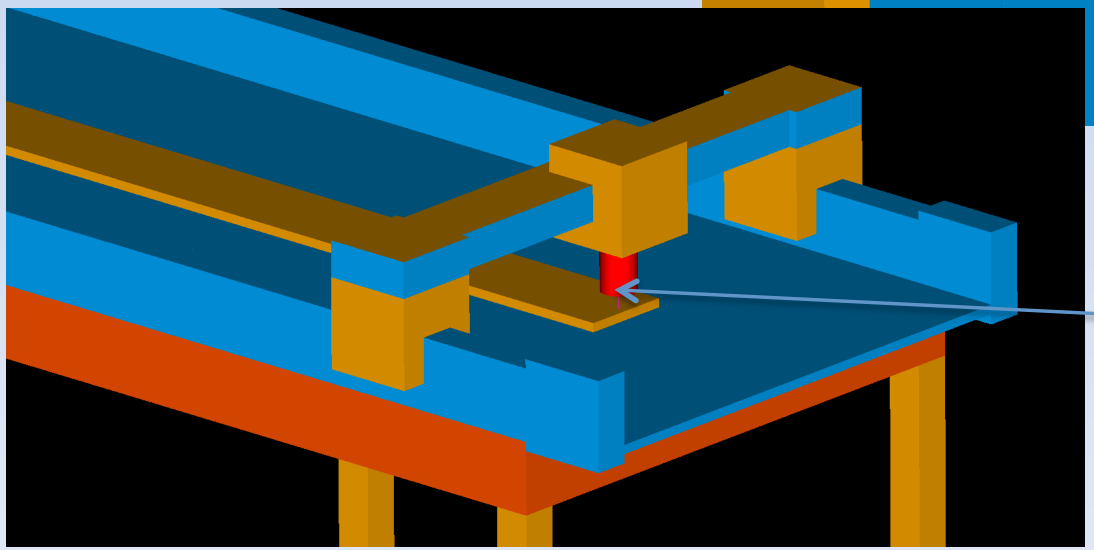

CYLINDRICAL MILLING CUTTER

Machine dispensing the resin

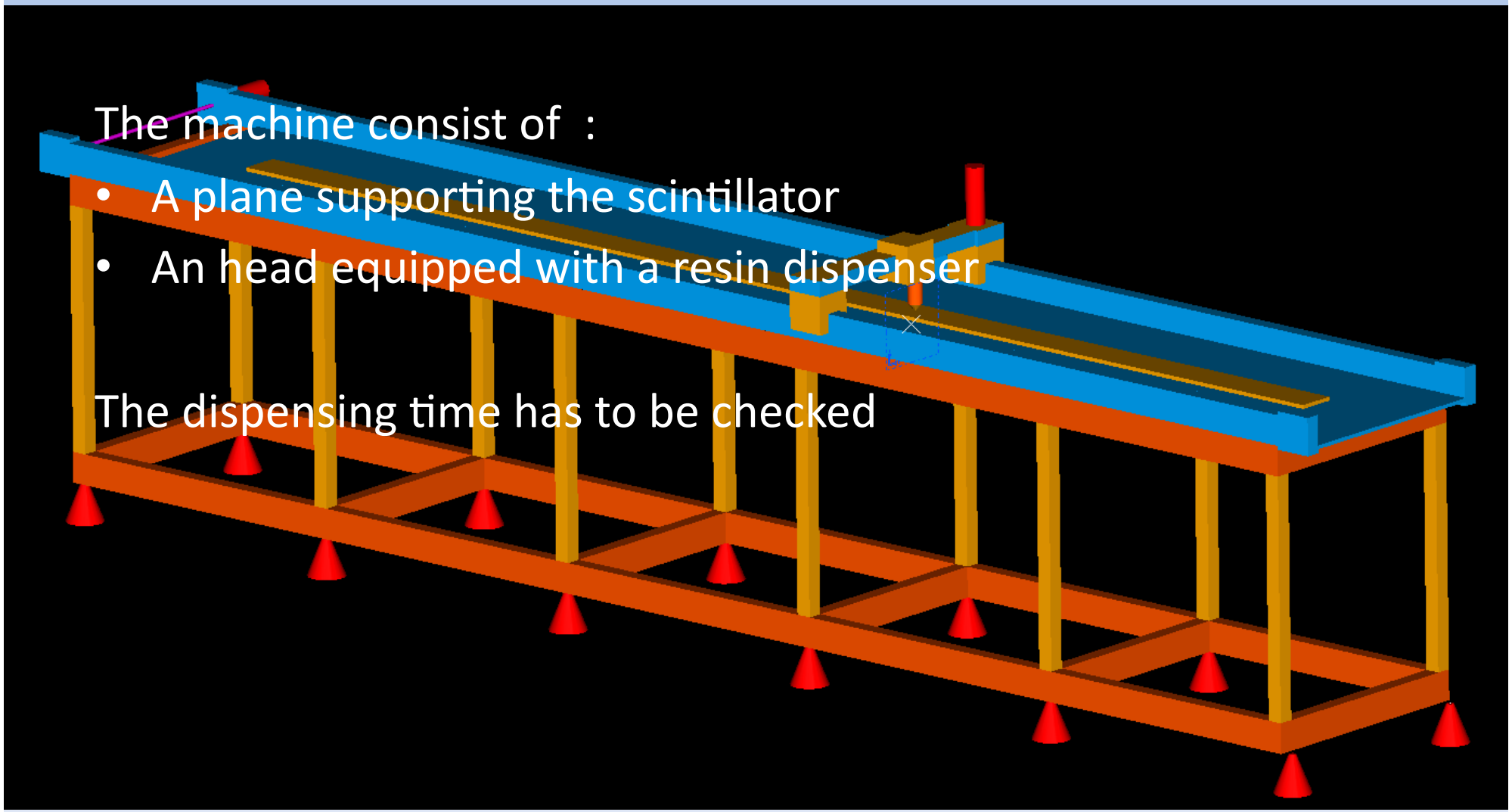

The machine consist of :

- A plane supporting the scintillator
- An head equipped with a resin dispenser

The dispensing time has to be checked

machine machine sketches (I)

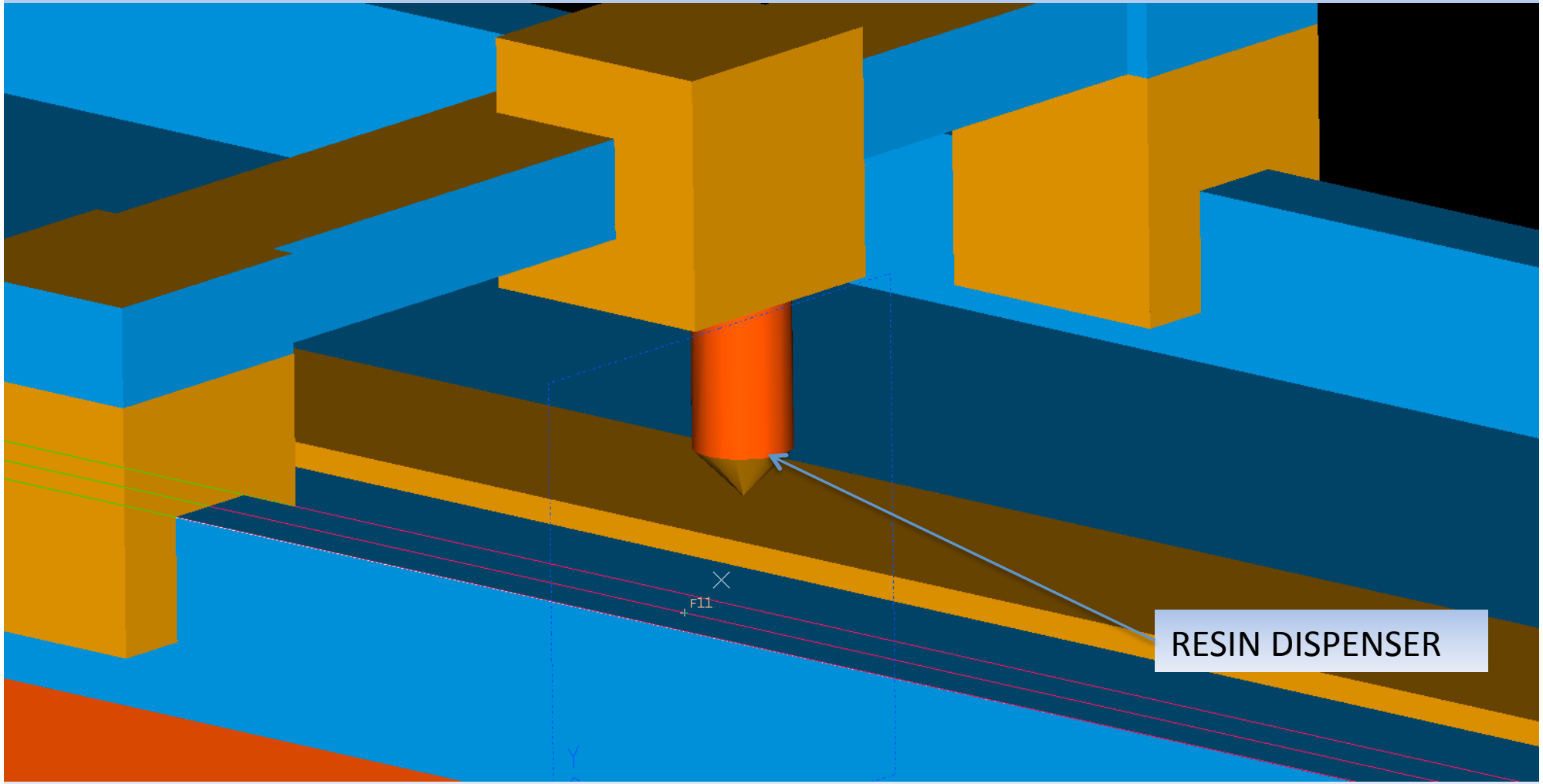

Conclusions

- The detector design is in a good advanced status of development
- The toolings needed for the construction of the detector are under way
- The toolings for the assembly in the experimental area have to be developed