Effectiveness of biological inspired neural network models in learning and patterns memorization

Nico Curti[1, 2], Lorenzo Squadrani[3], Enrico Giampieri[3], Daniel Remondini[1, 2], Brian Blais[4], Gastone Castellani[3]

[1] Department of Physics and Astronomy, University of Bologna
[2] INFN, Bologna
[3] Department of Medical and Surgical Sciences, University of Bologna
[4] Department of Science, Bryant University, Smithfield, RI

next AIM General Meeting
13/02/2023

NEURAL NETWORK MODELS

The development of NN models could be driven by:

Biological inspired models

- Hopfield model
- BCM model
- Neuro-science network

Physics/Mathematical models

- Boltzman machine
- Belief Propagation
- Deep learning models

WHAT WE CURRENTLY HAVE

Back-Propagation algorithm is the standard method in Machine learning and Deep learning:

- It's simple
- It's computationally efficient
- It's easy to combine
- It allows complex models

Complex models → **hard** interpretation

WHY WE NEED IT

The **interpretability** of the learning process relies on the formalization of concepts as **memory** and **statistical equilibrium**.

- Strict mathematical formalism
- Adherence with biology
- Continuous integration between laboratory results and computational simulations
- Edge with functionalities of the human brain

Simple models → **easier** interpretation

Simple does not mean less powerful!

THE ORIGIN OF THE IDEA

The BCM model is an "old" model deeply studied also by UNIBO groups

BUT

PNAS

Unsupervised learning by competing hidden units

Dmitry Krotov[a,b,1,2] and John J. Hopfield[c,1,2]

[a]Massachusetts Institute of Technology–International Business Machines (IBM) Watson Artificial Intelligence Laboratory, IBM Research, Cambridge, MA 02142; [b]Institute for Advanced Study, Princeton, NJ 08540; and [c]Princeton Neuroscience Institute, Princeton University, Princeton, NJ 08544

Contributed by John J. Hopfield, February 11, 2019 (sent for review November 30, 2018; reviewed by Dmitri B. Chklovskii, David J. Heeger, and Daniel D. Lee)

It is widely believed that end-to-end training with the backpropagation algorithm is essential for learning good feature detectors in early layers of artificial neural networks, so that these detectors are useful for the task performed by the higher layers of that

observational, with few or no labels, so that there is no explicit task. The learning is said to be unsupervised. By contrast, supervised training of a deep artificial neural network (ANN) with backpropagation requires a huge amount of labeled data.

THE HOPFIELD MODEL

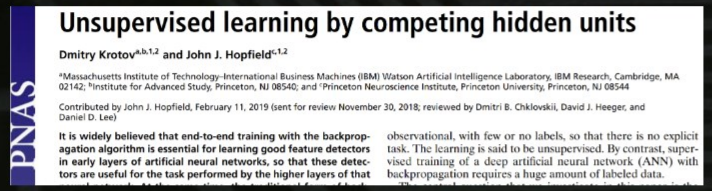
PNAS

Unsupervised learning by competing hidden units

Dmitry Krotov[a,b,1,2] and John J. Hopfield[c,1,2]

[a]Massachusetts Institute of Technology–International Business Machines (IBM) Watson Artificial Intelligence Laboratory, IBM Research, Cambridge, MA 02142; [b]Institute for Advanced Study, Princeton, NJ 08540; and [c]Princeton Neuroscience Institute, Princeton University, Princeton, NJ 08544

Contributed by John J. Hopfield, February 11, 2019 (sent for review November 30, 2018; reviewed by Dmitri B. Chklovskii, David J. Heeger, and Daniel D. Lee)

It is widely believed that end-to-end training with the backpropagation algorithm is essential for learning good feature detectors in early layers of artificial neural networks, so that these detectors are useful for the task performed by the higher layers of that

observational, with few or no labels, so that there is no explicit task. The learning is said to be unsupervised. By contrast, supervised training of a deep artificial neural network (ANN) with backpropagation requires a huge amount of labeled data.

- Novel BCM-like model;
- Application to **Real Data**;
- Application in ML

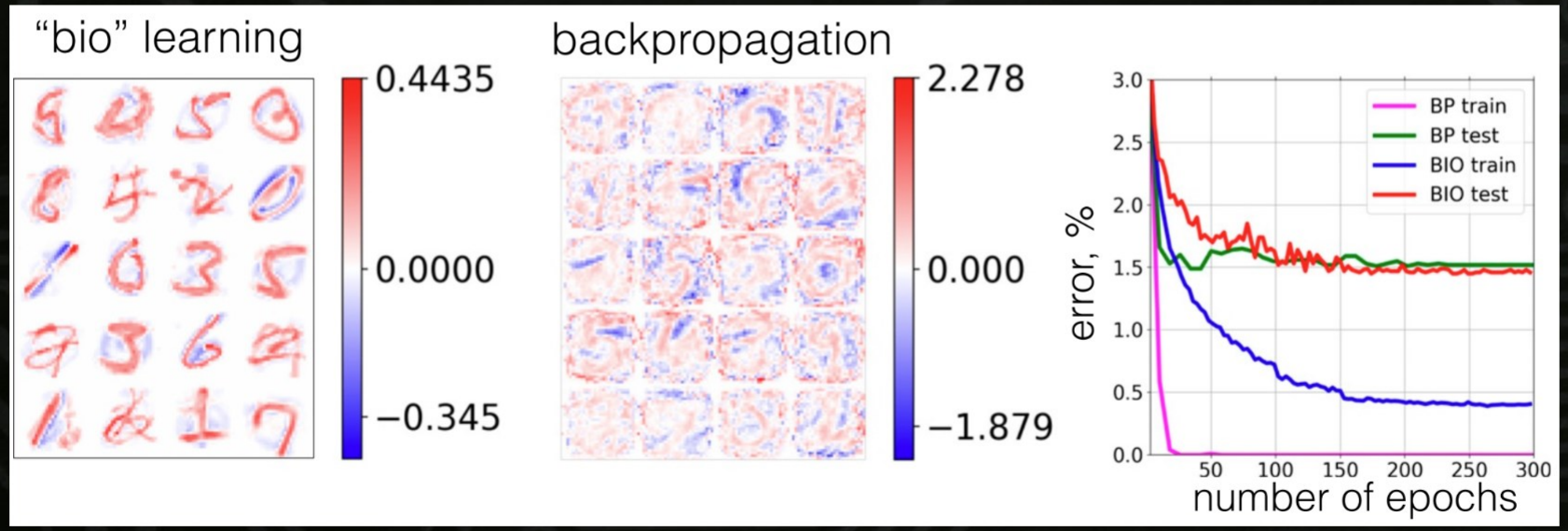

Reference: 10.1073/pnas.1820458116

THE CLASSICAL BCM MODEL

Artificial Intelligence in Medicine

BCM (Bienenstock, Cooper, and Munro 1982)

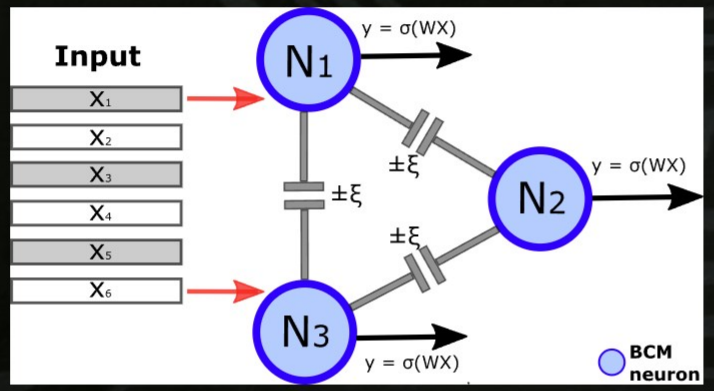

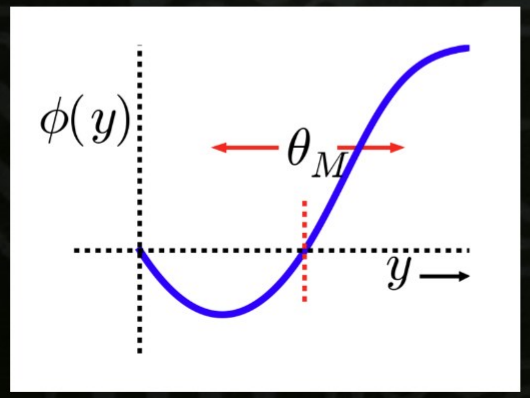

- output:

$$y = \sigma(\sum_i (w_i x_i))$$

- update rule:

$$\frac{dw_i}{dt} = \frac{y(y-\theta_M)x_i}{\theta_M}$$

$$\theta_M = E[y^2]$$

- NO desired output!

Reference: BCM implementation

THE CLASSICAL BCM MODEL

Artificial Intelligence in Medicine

BCM (Bienenstock, Cooper, and Munro 1982)

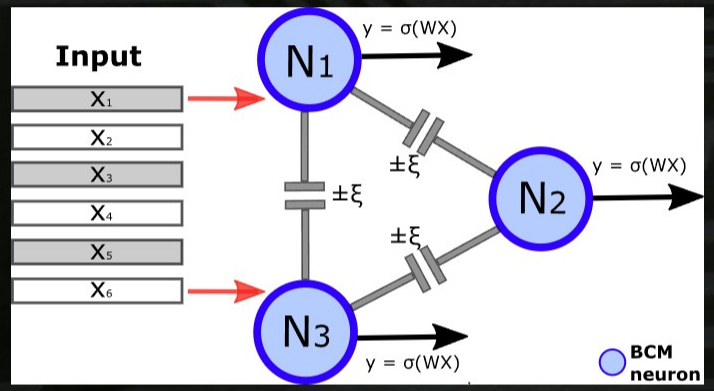

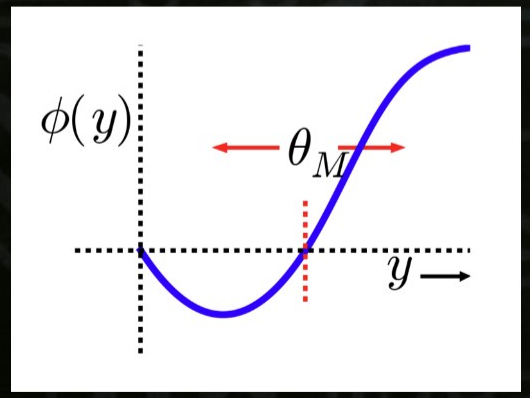

- Rule for synaptic change;
- Hebb-like behavior;
- Long-term potentiation(depression) (LTP/LTD) induction;
- Synaptic plasticity is stabilized by a dynamic adaptation of the time-averaged post-synaptic activity;
- Neurons competition

Reference: BCM theory

WHAT IS NEW?

We propose an implementation of the BCM model, obtained by the combination of the classical framework and modern deep learning features:

1. Introduction of lateral connections and non-linearity between neurons (Castellani et al.[1] 1999)

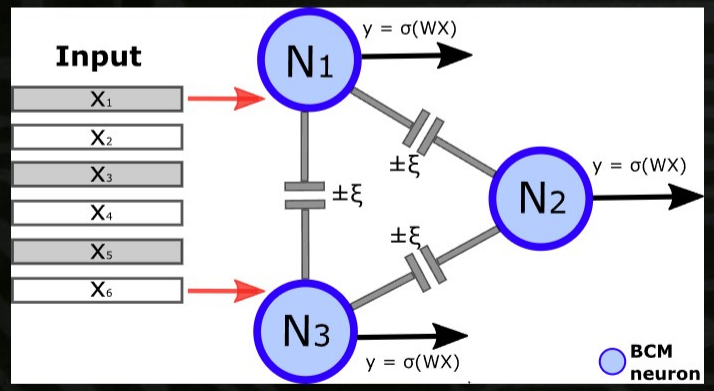

- Inhibition/increment post-synaptic activities
- Model competition/cooperation between neurons
- From a math point-of-view:

$$y = \sigma\left((1-L)^{-1}WX\right)$$

WHAT IS NEW?

2. Move from classical SGD algorithm to modern ones (e.g. Adam)

3. Move from classical sigmoid activation to modern ones (e.g. ReLU)

4. Move from classical Normal weights initialization to modern ones (e.g. Glorot Normal)

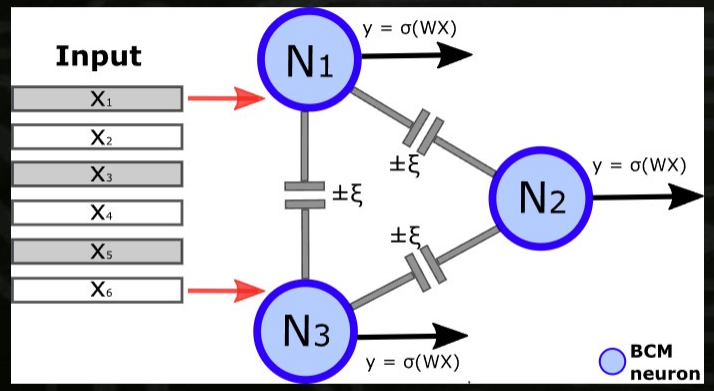

BCM model does not fix any constraints on

- the optimization strategy
- the form of the activation function
- the way to initialize weights

WHAT IS NEW?

The modification threshold θ of neurons is one of the key aspects of BCM algorithm.

5. In our implementation we use a moving average of previous batch-averaged quadratic post-synaptic activities:

$$\theta_t = \gamma\theta_{t-1} + (1-\gamma)\langle z^2 \rangle_{b_t}$$

where γ is the decay-memory factor and $\langle \cdot \rangle_{b_t}$ is the average over batch at time t

NETWORK PROPERTIES

Given a set of N inter-connected neurons the learning power of the architecture is determined by:

Selectivity

We say that the i-th neuron has selected the pattern $x \in X$ if

$$y_i(x) - E[y_i(x)] > 0$$

from which we can measure the selectivity α_i as

$$\alpha_i = |A_i|, \; A_i = \{x \in X | y_i(x) - E[y_i(x)] > 0\}$$

NETWORK PROPERTIES

Given a set of N inter-connected neurons the learning power of the architecture is determined by:

Competitiveness

Let S be the total number of patterns which have been selected by the BCM network, and $\bar{\alpha}$ the average selectivity of the neurons in the network. We define the **overlapping index** as

$$\beta = \frac{S}{\bar{\alpha}}$$

where β ranges in $[1, N]$.

NETWORK PROPERTIES

Given a set of N inter-connected neurons the learning power of the architecture is determined by:

Memorization

For a fixed number of neurons and their selectivity α_i, the maximum memorization capacity of the model, i.e., the maximum number of patterns that can be selected, is given by

$$C = \sum_{i=1}^{N} \alpha_i \approx \bar{\alpha} \times N$$

APPLICATION TO REAL DATA

MNIST dataset

- 50 000 images (28×28);
- 10 classes
- Gray scale images

CIFAR-10 dataset

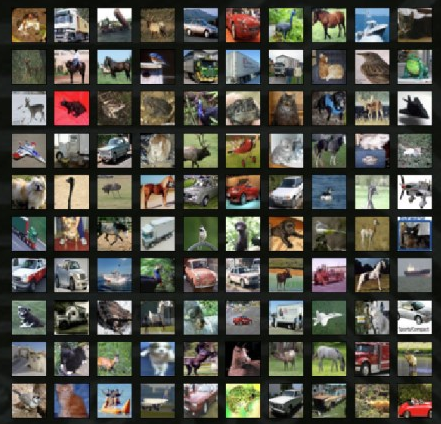

- 70 000 images (32×32);
- 10 classes
- RGB images

RESULTS

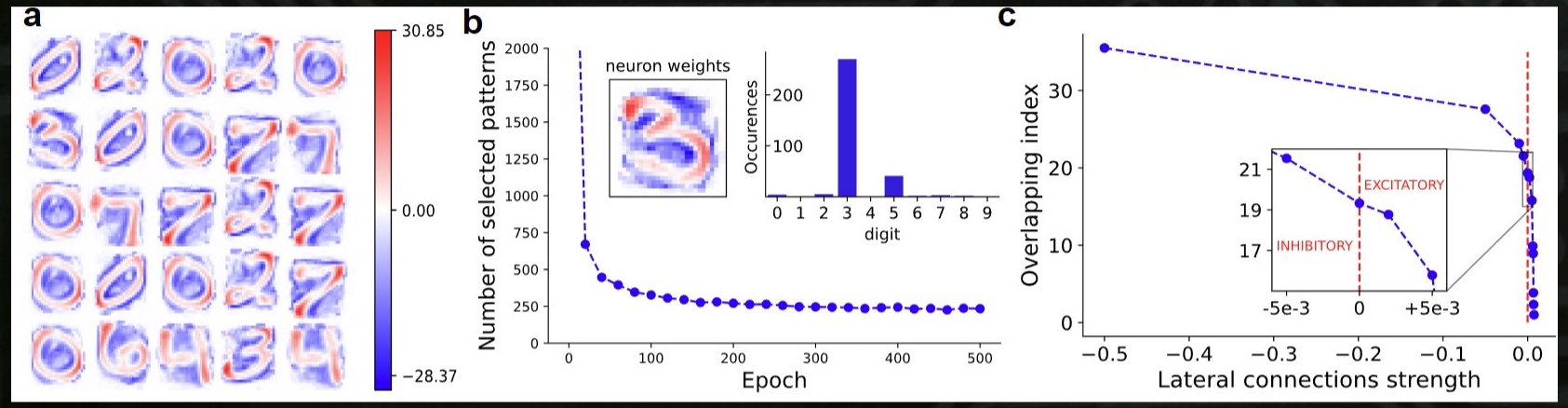

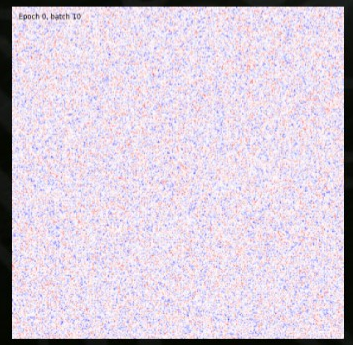

- Neuron selectivity tuned according to memory factor
- Not simple memorization
  → internal feature extraction → patterns clustering
- Improved training efficiency
- Satisfy the explainability requirement

RESULTS

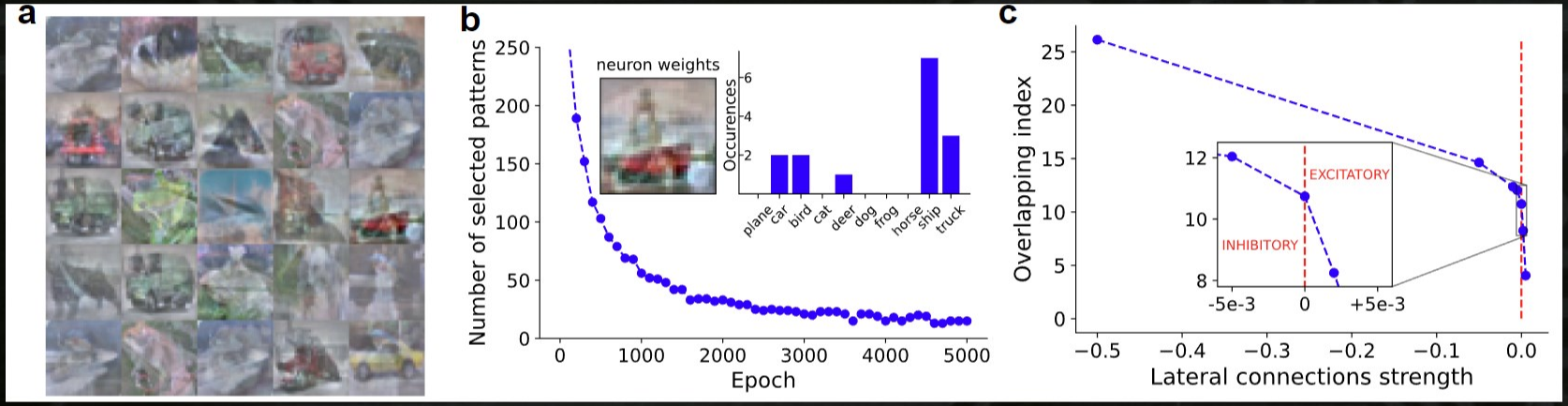

- Neuron selectivity tuned according to memory factor
- Not simple memorization
  → internal feature extraction → patterns clustering
- Improved training efficiency
- Satisfy the explainability requirement

WHAT IS NEXT?

- Extend the BCM network to a multi-layers configuration
- Merge the BCM with classical back-propagation models
- A deeper analysis of the latent space produced by synaptic-weights
- Extend the BCM to supervised classification tasks

Spoiler Alert

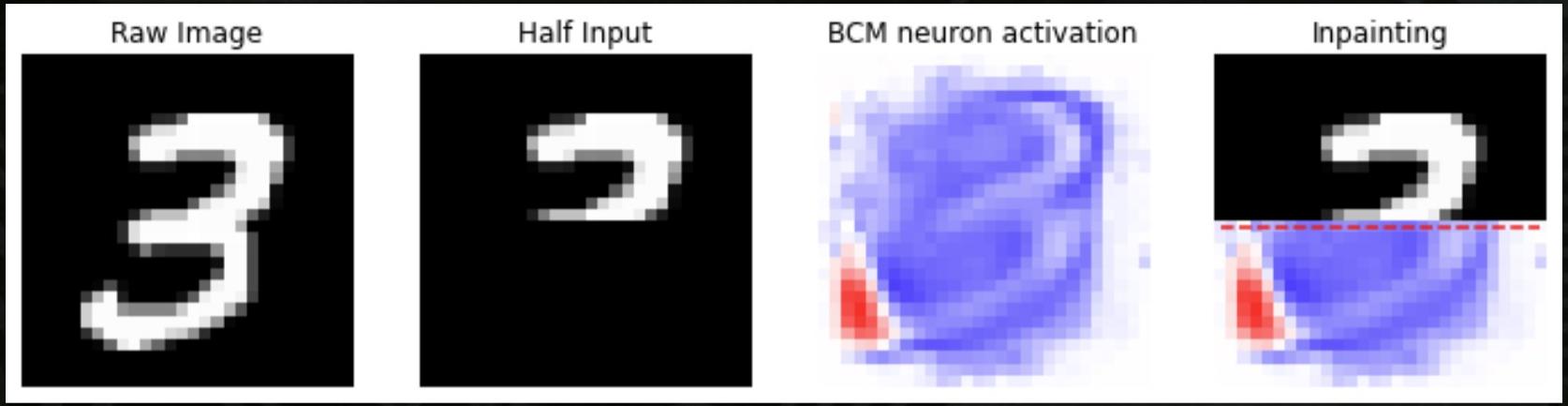

INFN
Istituto Nazionale di Fisica Nucleare

Artificial
Intelligence in
Medicine

next AIM

Thank you for the attention