Wavefront sensing and control in Gravitational Wave detectors

Antonio Perreca
Andrea Grimaldi

University of Trento

GRAvitational-waves Science&technology Symposium
GRASS2022

Padova, 6-7 June 2022

Outline

- Motivations for the active wavefront sensing and control systems
- Mode Matching analysis
- Wavefront control: overview
- Wavefront control of Astigmatism: Preliminary approach
- Wavefront sensing: overview

Advanced Gravitational Wave detectors

Layouts

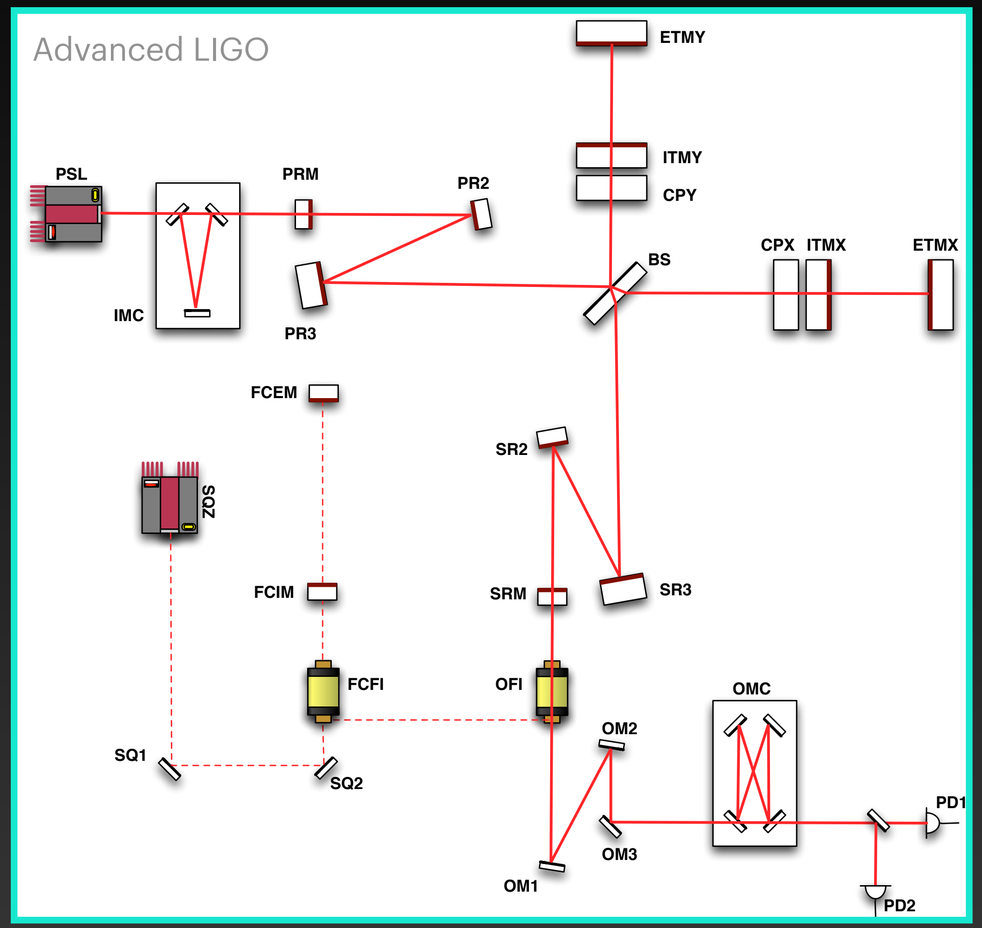

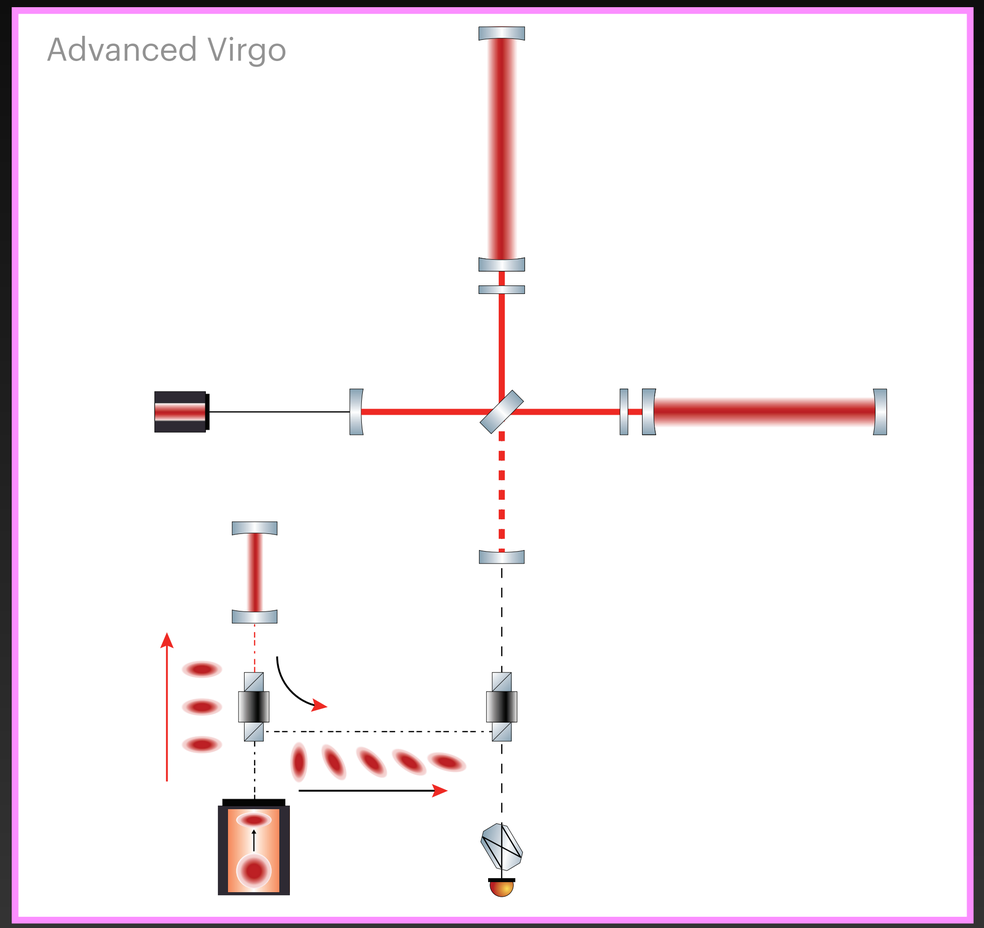

Advanced Gravitational Wave detectors

Frequency Dependent Squeezing

- Initially fluctuations of a vacuum state are uniformly distributed between Amplitude and Phase quadratures
  - Squeezing involves the preparation of a vacuum state
  - Frequency independent squeezing: High frequency quantum noise suppression
  - Frequency dependent squeezing: Low and High frequency quantum noise suppression

Advanced Gravitational Wave detectors

Frequency Independent Squeezing

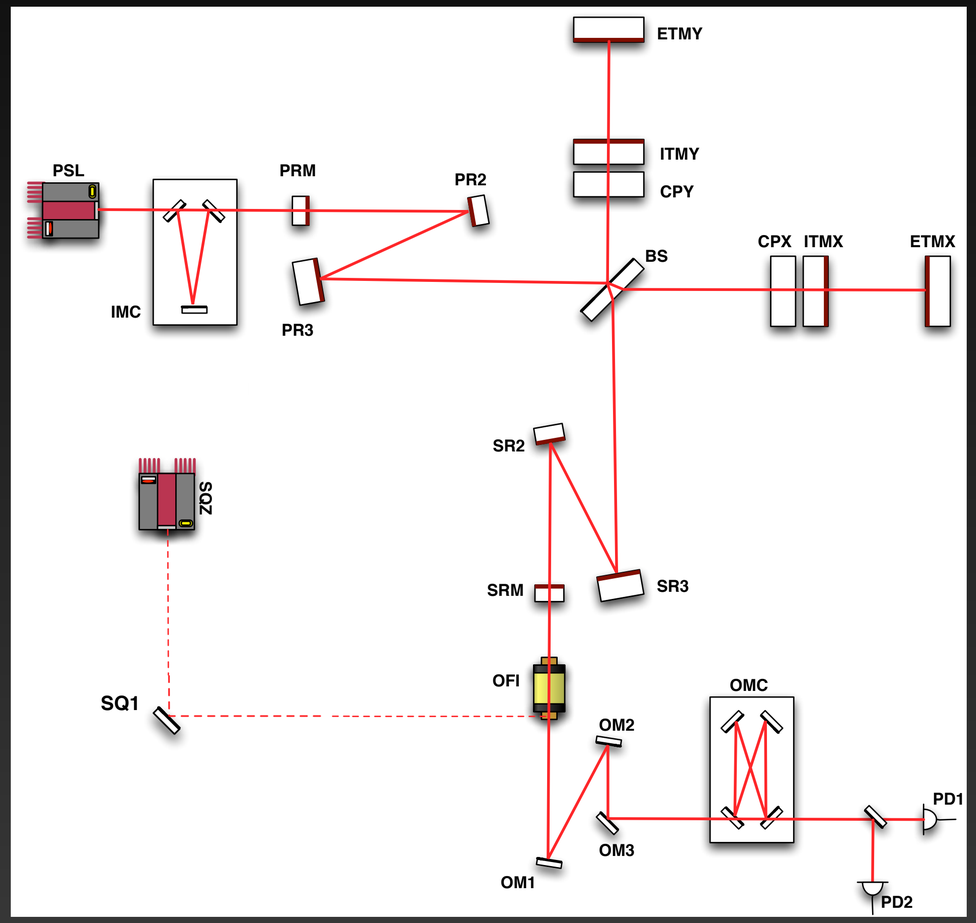

- Initially fluctuations of a vacuum state are uniformly distributed between Amplitude and Phase quadratures
  - Squeezing involves the preparation of a vacuum state
  - Frequency independent squeezing: High frequency quantum noise suppression
  - Frequency dependent squeezing: Low and High frequency quantum noise suppression

Advanced Gravitational Wave detectors

Frequency Dependent Squeezing

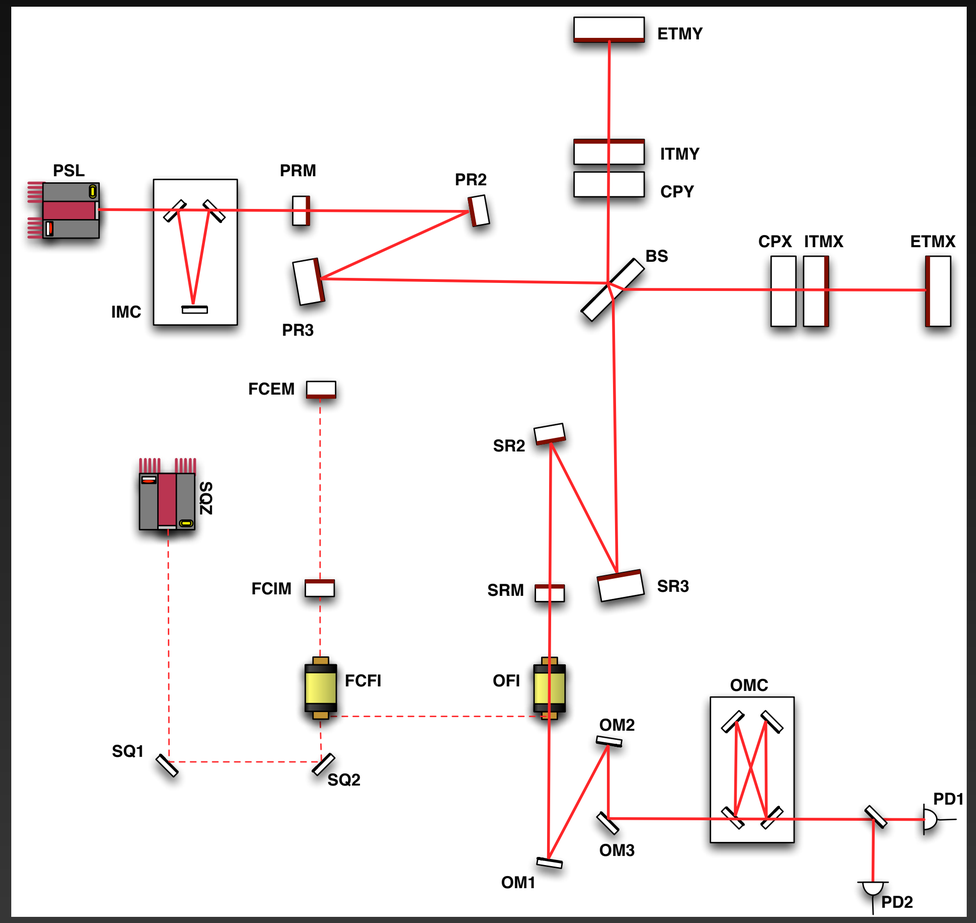

- Initially fluctuations of a vacuum state are uniformly distributed between Amplitude and Phase quadratures
  - Squeezing involves the preparation of a vacuum state
  - Frequency independent squeezing: High frequency quantum noise suppression
  - Frequency dependent squeezing: Low and High frequency quantum noise suppression

Advanced Gravitational Wave detectors

Requirements for squeezing

- In a real interferometer the level of squeezing is limited by losses and quadrature fluctuations
- Losses mix squeezed vacuum state with the unsqueezed state
- **Sources of losses:**
  - Reflection from optics
  - Scattering
  - Quantum efficiency
  - Mode Matching

Oelker et al.,

Optics Express Vol. 22, Issue 17, pp. 21106-21121 (2014) • https://doi.org/10.1364/OE.22.021106

Total losses must be limited to ~10%-15%

Losses due to mode-matching must be ~2%

Mode Matching analysis

Advanced Gravitational Wave detectors

Causes of Mode Mismatch

- Static

  - Mirror Aberrations
  - Radii of curvatures deviations from nominal values

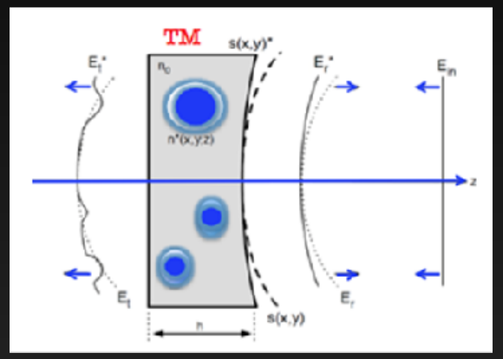

VIR-0598A-18

- Dynamic

  - Thermal Lensing
    - Thermo-elastic
    - Thermo-refractive

Mode Matching analysis

One cavity: Phase-Space (w,1/R)

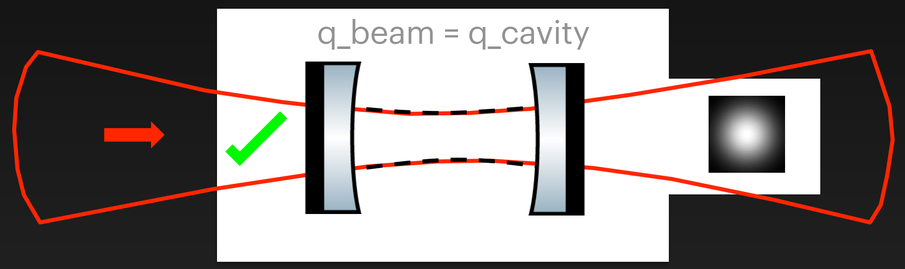

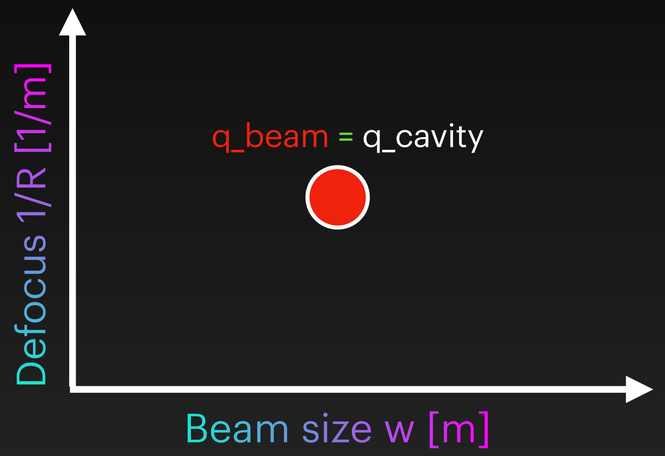

$$\frac{1}{q} = \frac{1}{R} - i\frac{\lambda}{\pi\omega^2}$$

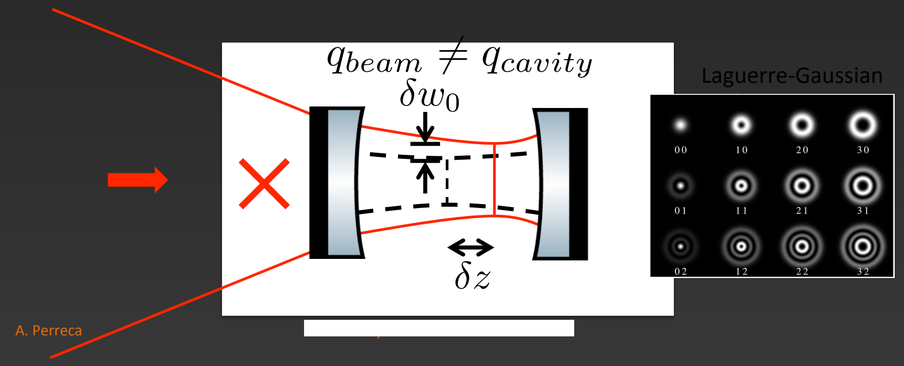

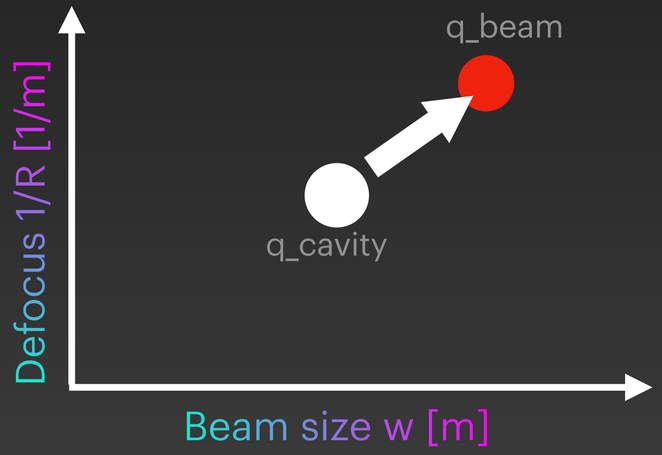

Advanced Gravitational Wave detectors

Layouts

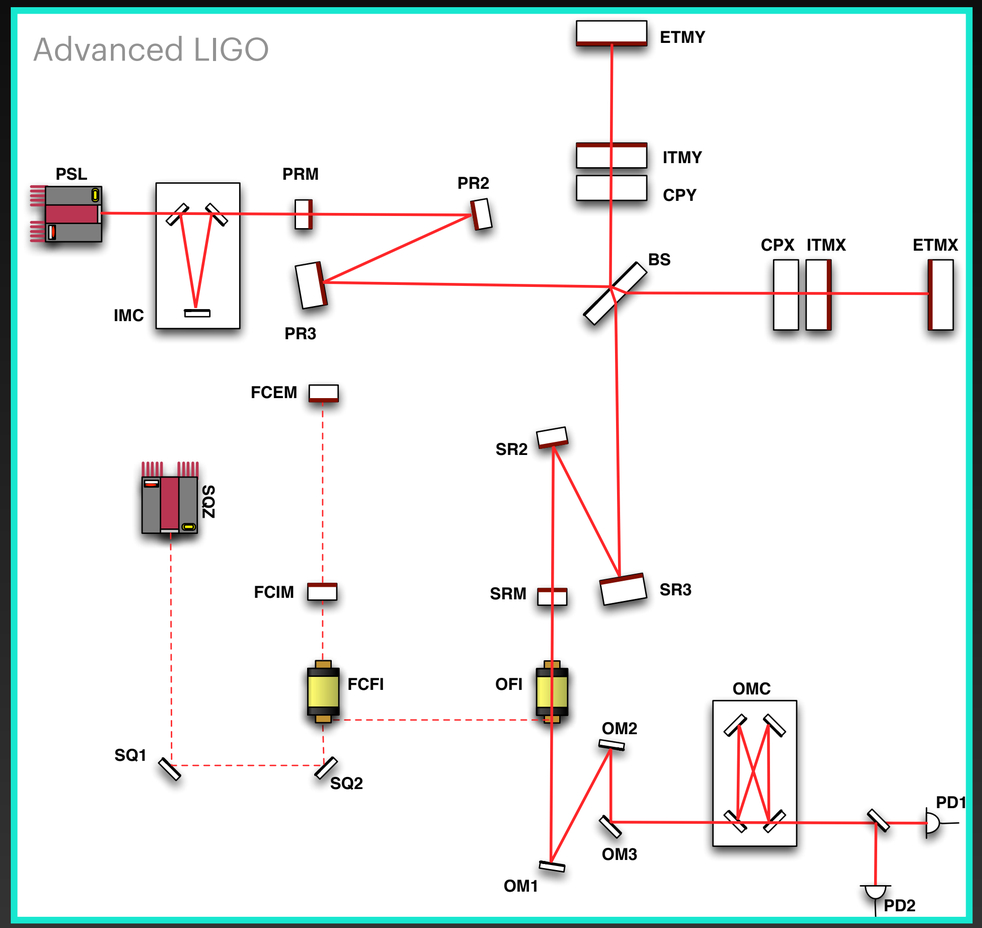

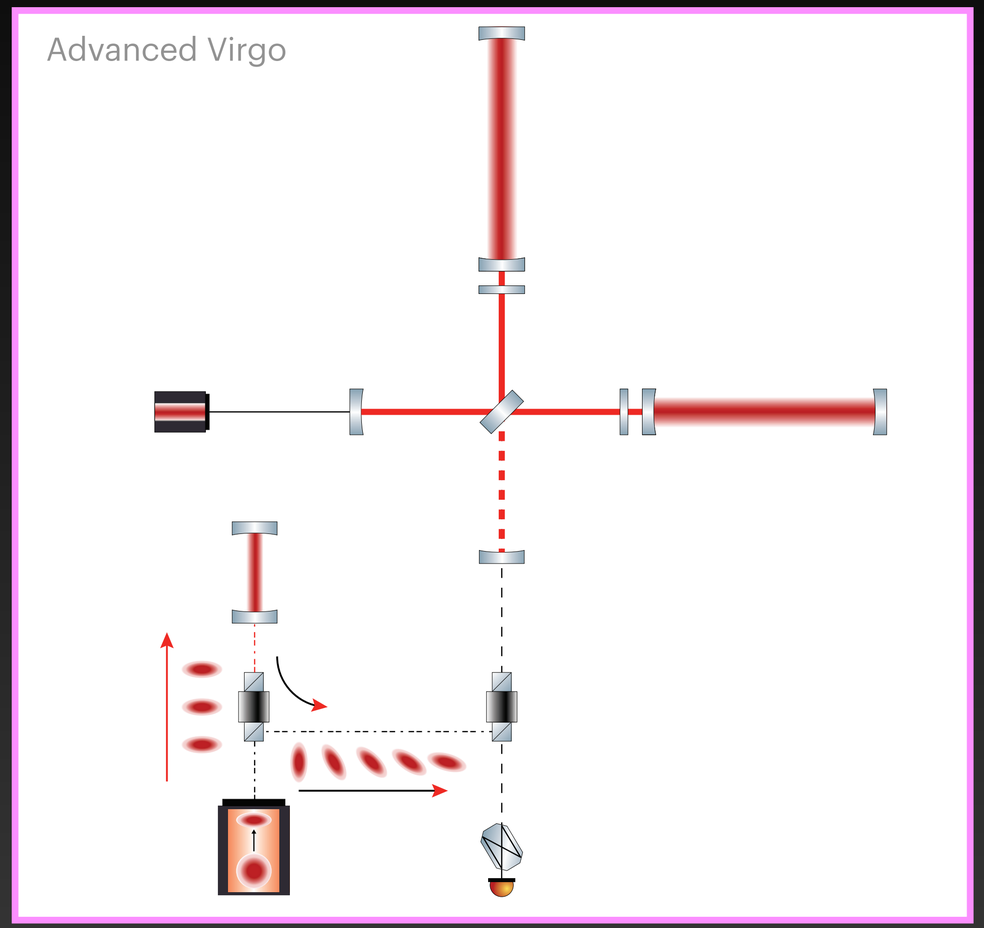

Mode Matching analysis

Phase-Space

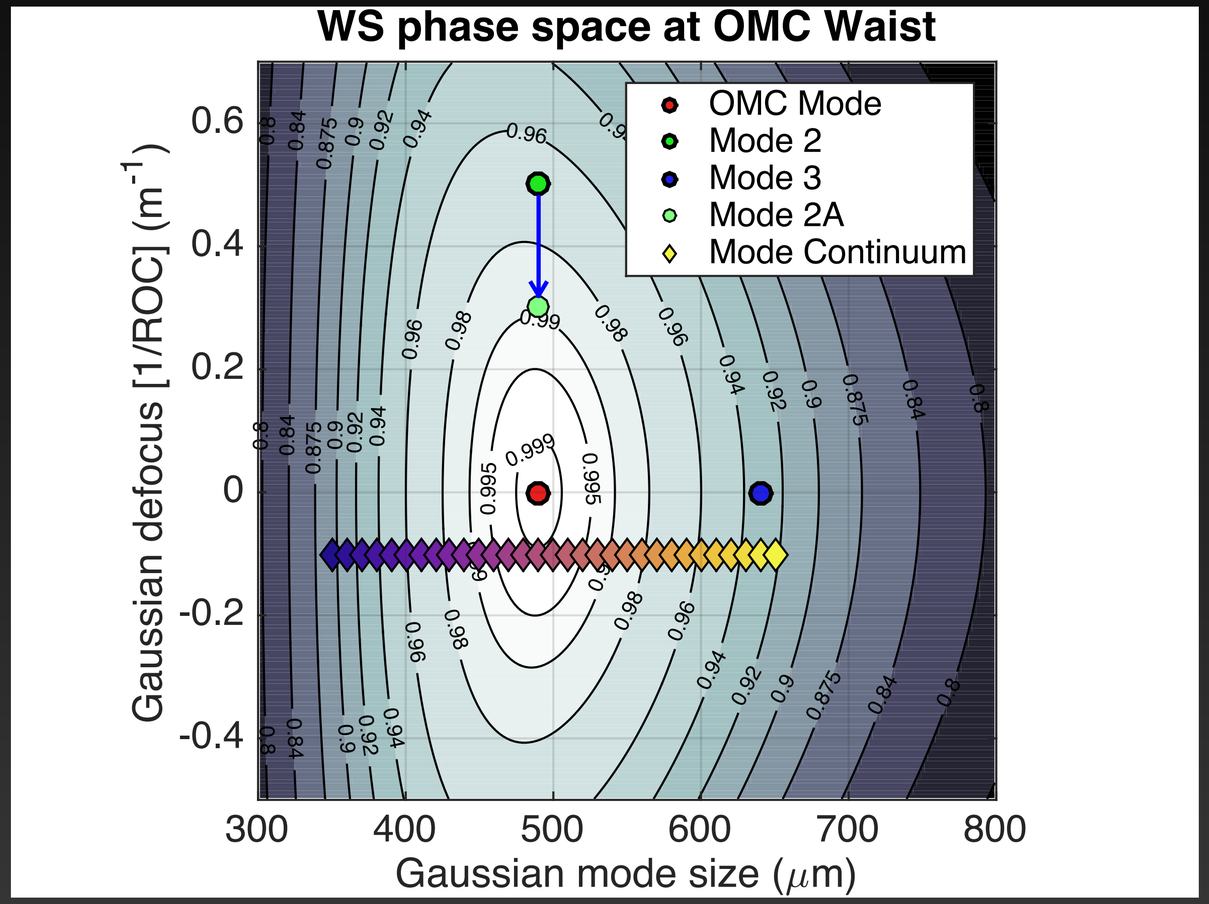

Credit to Aidan Brooks

- OMC mode is the principal mode
  - Mode 2 has same size, different defocus
  - Mode 3 has same defocus, different size
  - Actuation on mode 2 of 0.2 D
  - Continuum mode, actuation on size

Mode Matching analysis

A real example for ALIGO: Phase-Space

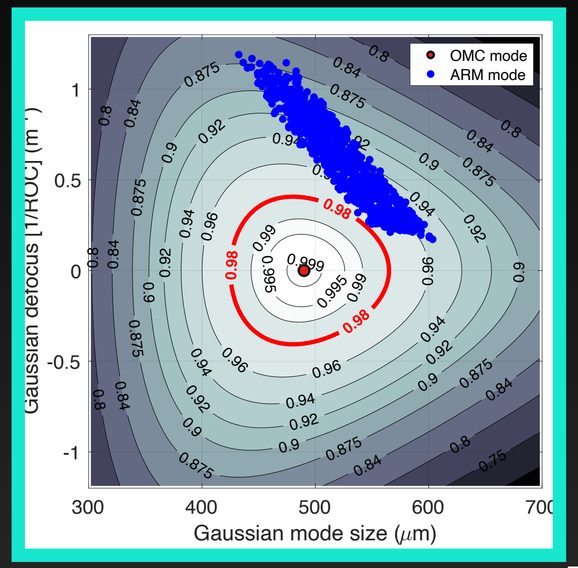

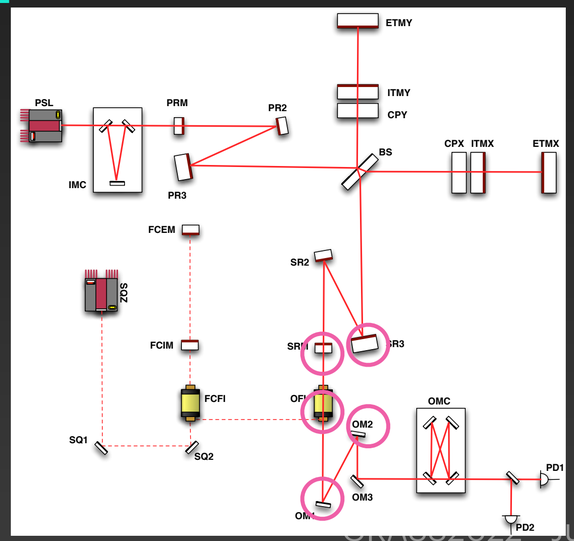

- Radii of curvatures can account for more than ~12% mismatch
  - Initial region, before any actuation is applied
  - After SR3 actuation, optimal Signal Recycling and arms cavity matching
  - After SR3, OM1 and OM2 actuation
  - After SR3, OM1, OM2, SRM and FI actuation

1000 configurations with
"random" Rocs (within tolerances)

Mode Matching analysis

A real example for ALIGO: Phase-Space

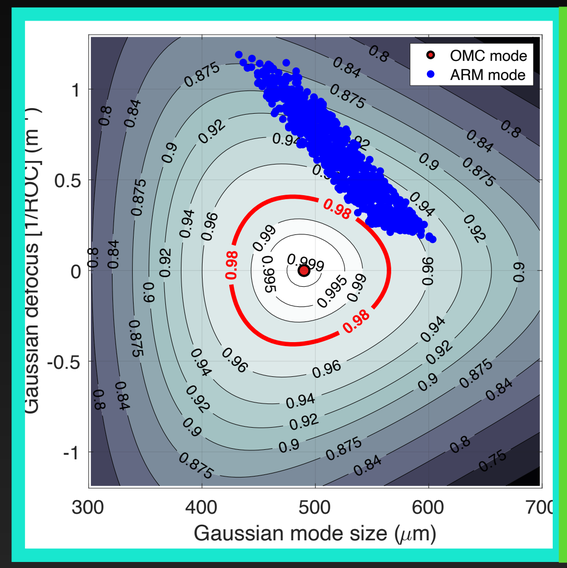

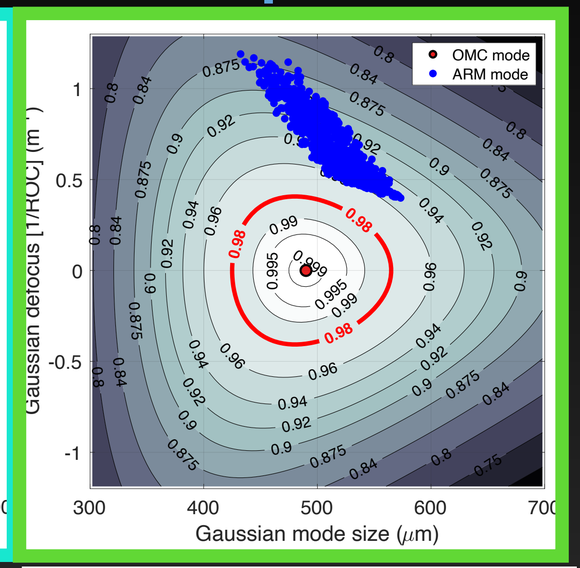

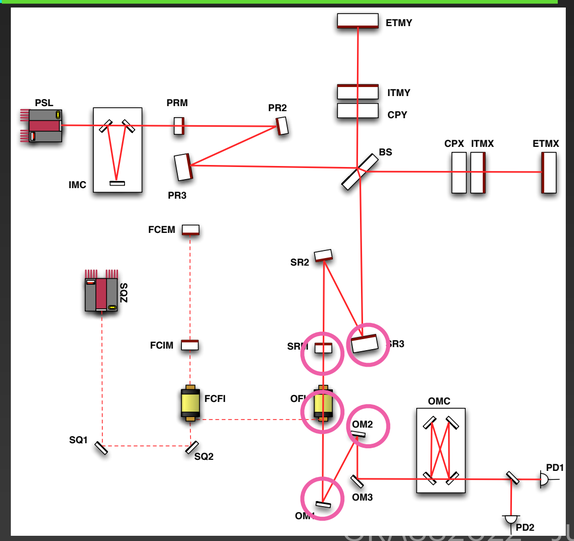

- Radii of curvatures can account for more than ~12% mismatch
  - Initial region, before any actuation is applied
  - After SR3 actuation, optimal Signal Recycling and arms cavity matching
  - After SR3, OM1 and OM2 actuation
  - After SR3, OM1, OM2, SRM and FI actuation

1000 configurations with "random" Rocs (within tolerances)

Mode Matching analysis

A real example for ALIGO: Phase-Space

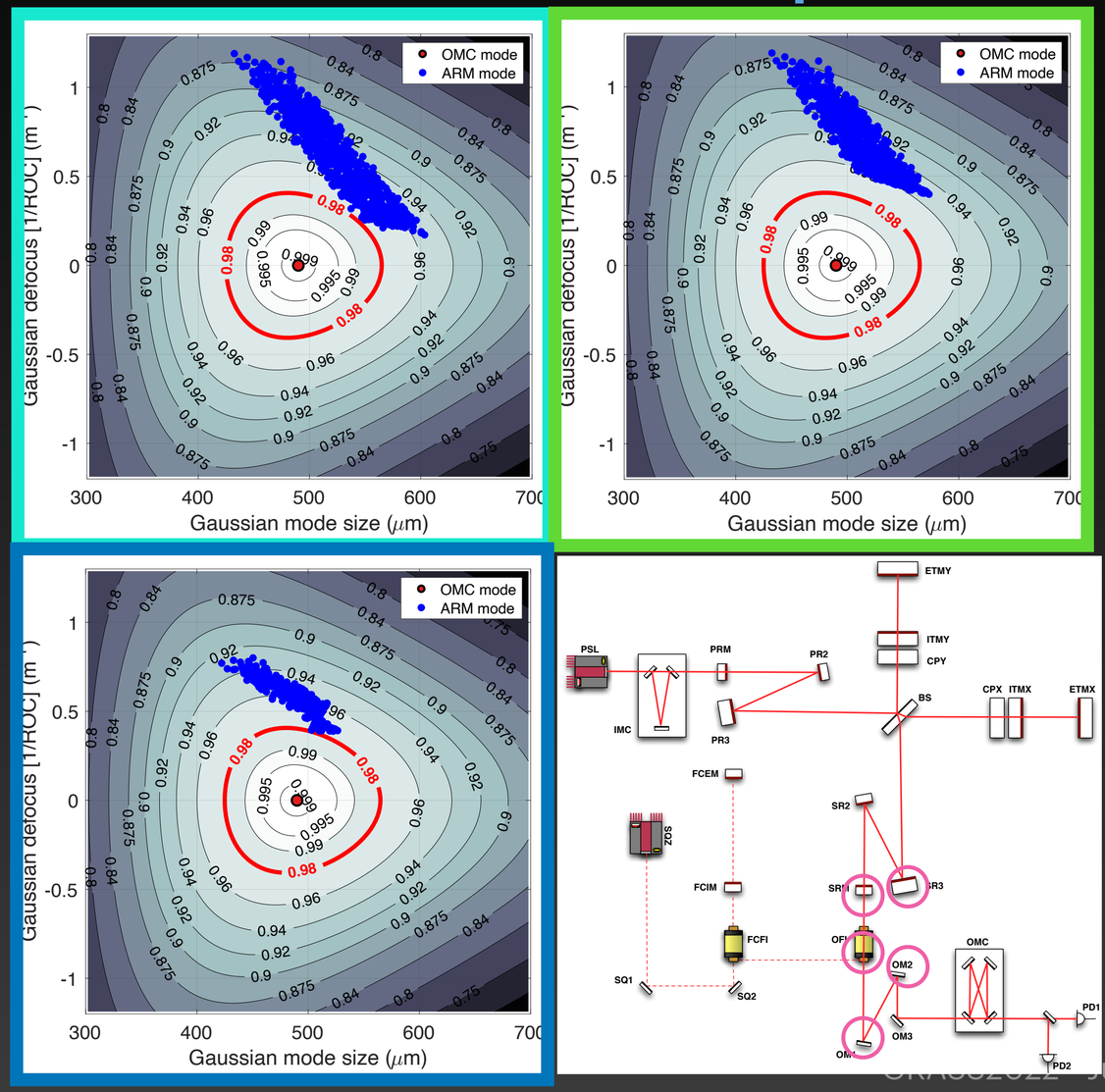

- Radii of curvatures can account for more than ~12% mismatch
  - Initial region, before any actuation is applied
  - After SR3 actuation, optimal Signal Recycling and arms cavity matching
  - After SR3, OM1 and OM2 actuation
  - After SR3, OM1, OM2, SRM and FI actuation

1000 configurations with "random" Rocs (within tolerances)

Mode Matching analysis

A real example for ALIGO: Phase-Space

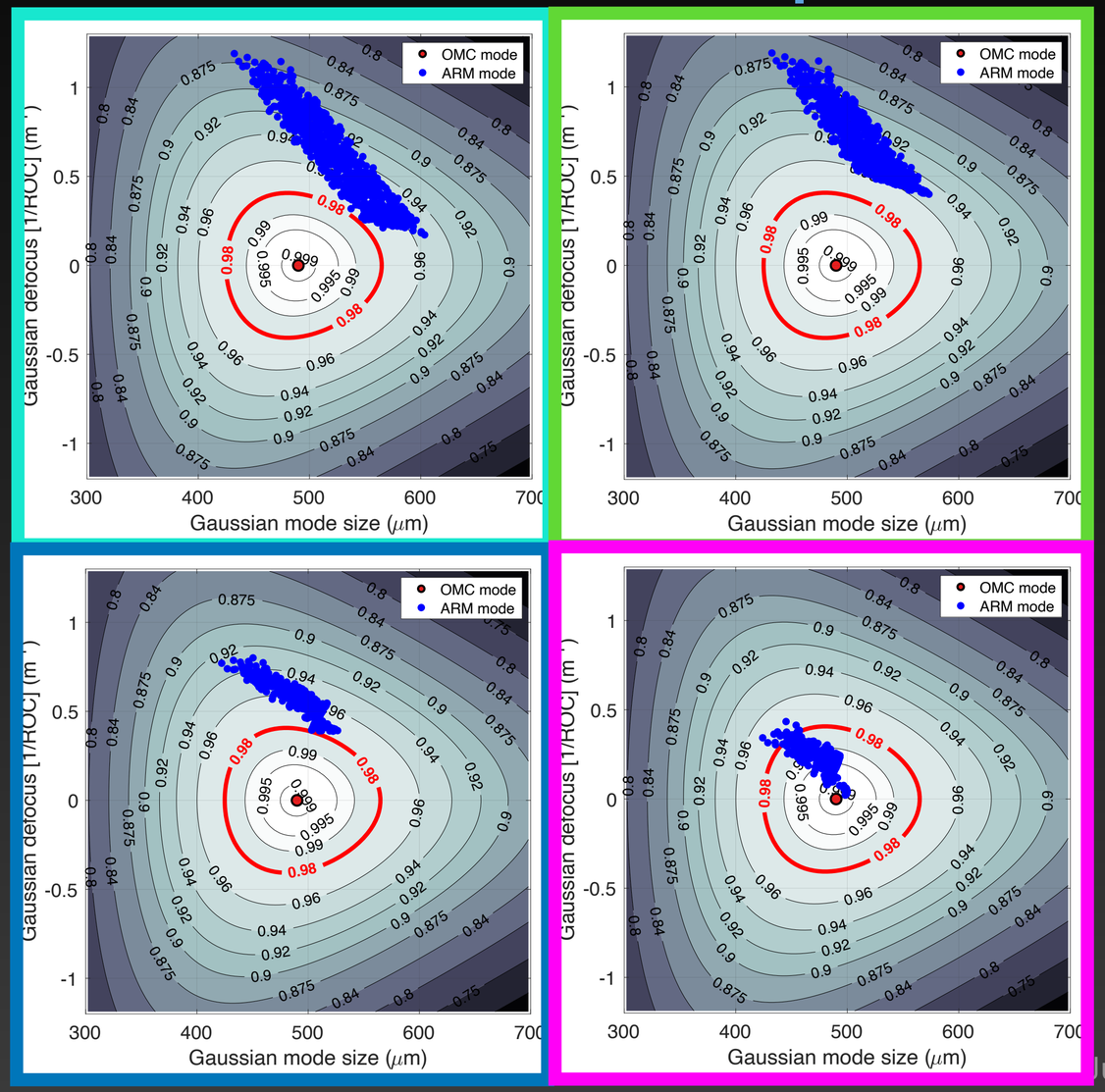

- Radii of curvatures can account for more than ~12% mismatch
  - Initial region, before any actuation is applied
  - After SR3 actuation, optimal Signal Recycling and arms cavity matching
  - After SR3, OM1 and OM2 actuation
  - After SR3, OM1, OM2, SRM and FI actuation

2020PhRvD.101j2005P 2020/05

Analysis and visualization of the output mode-matching requirements for squeezing in Advanced LIGO and future gravitational wave detectors

Perreca, Antonio; Brooks, Aidan F.; Richardson, Jonathan W.; Töyrä, Daniel; Smith, Rory

Wavefront Control

Advanced Gravitational Wave detectors

Causes of Mode Mismatch

- Static
  - Mirror Aberrations
  - Radii of curvatures deviations from nominal values

- Dynamic
  - Thermal Lensing
    - Thermo-elastic
    - Thermo-refractive

Wavefront Control

Thermal Compensation System (TCS) in aVirgo

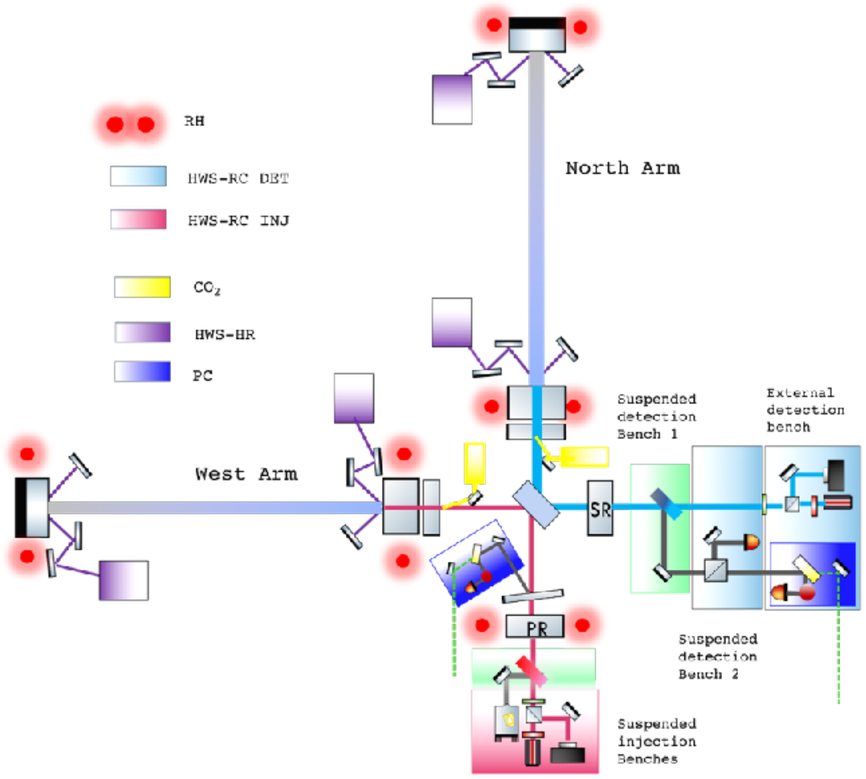

Image from VIR-0676B-21

- Measure the wavefront distortion
- Compensate for the self-heating, by actuating on the radius of curvature (Ring Heater)
- Compensate for the wavefront distortion in the substrate of Input test masses (CO2 laser)
- No injection of additional noise

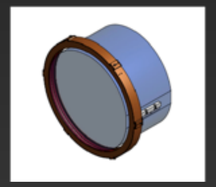

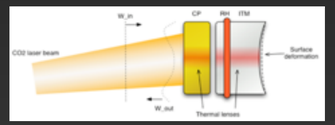

Images from VIR-0676B-21

Wavefront control in ALIGO (o4)

Additional actuators

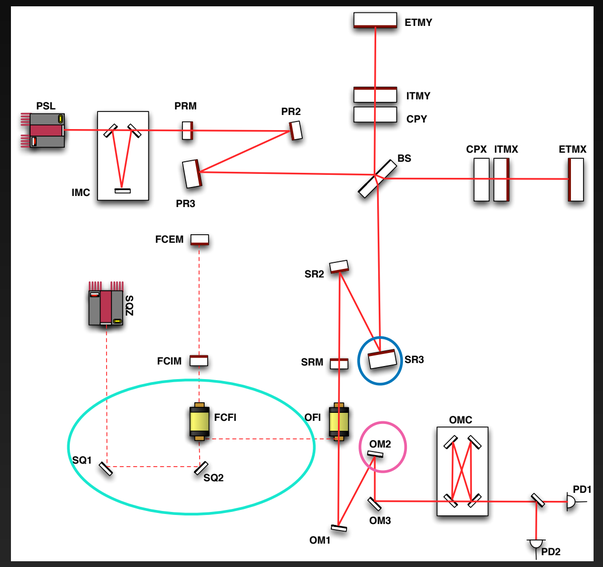

Suspended Active Matching Stage (SAMS)

Thermal-SAMS

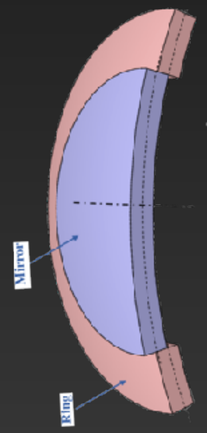

Piezo-SAMS

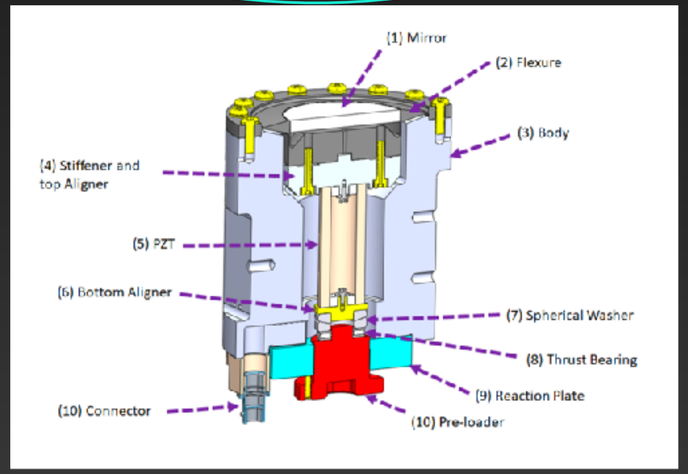

Disc plate

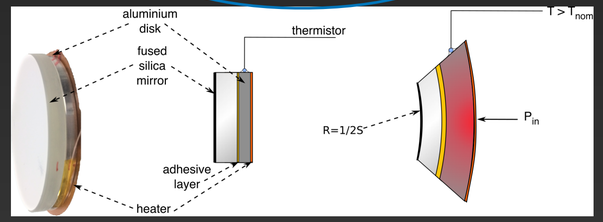

Wavefront control in ALIGO (o4)

Mode-matching expected results

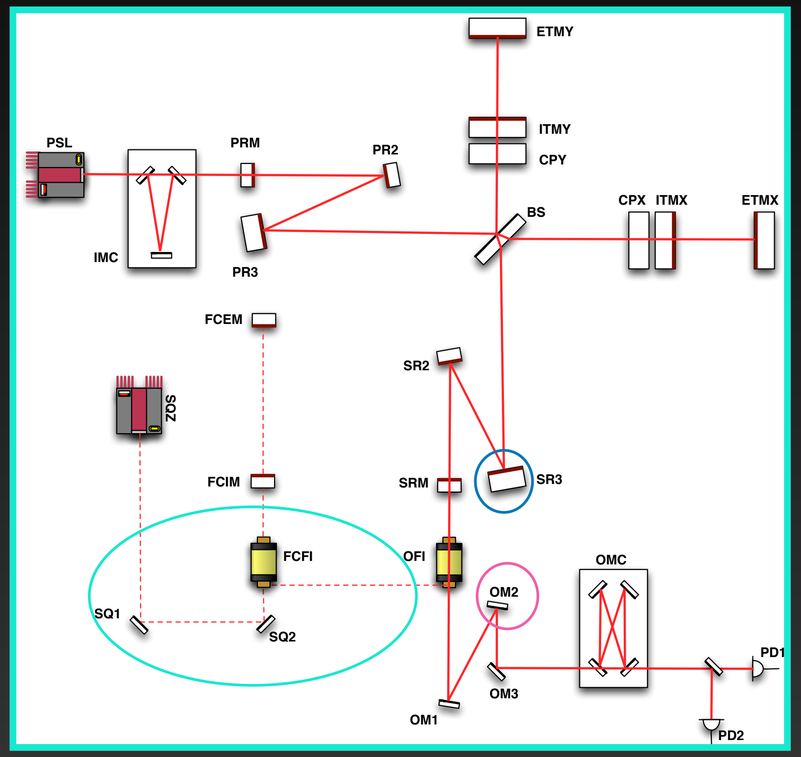

1 Executive Summary

1.1 Mode-matching correction

The Active Wavefront Control design will, when implemented with SAMS actuators, meet the design requirements with the following degrees of success:

- **IFO-OMC [O4]**: in approximately 40% of all possible cases, where success is defined as correcting initial mode-matching from $91 \pm 6\%$ to better than 98%.
- **IFO-OMC [O5]**: is not analyzed as the optical design does not yet exist.
- **SQZ-IFO**: in approximately 94% of possible cases (where success is defined as correcting initial mode-matching from $91 \pm 6\%$ to better than 96%). This is the best performing system as the optical design has been optimized for the AWC actuators.
- **SQZ-FC**: in approximately 70% of possible cases (where success is defined as correcting initial mode-matching from $93 \pm 6\%$ to better than 96%).

1.2 State-space estimator of interferometer mode

We propose using an extended Kalman filter to provide an online state space estimator of the current interferometer mode.

DCC: T2000244-V2

Wavefront control (O5 - Post O5)

Astigmatism Corrections

Idea

•Different contact pressures distributions will produce differences in curvature

Two opportunely shaped ring made of materials with different coefficient of thermal expansion (CTE) will produce two orthogonal different contact pressure distributions

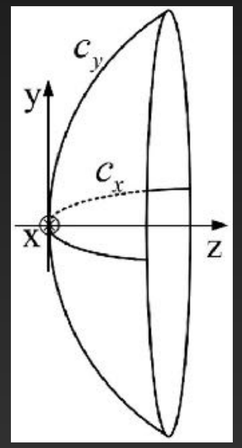

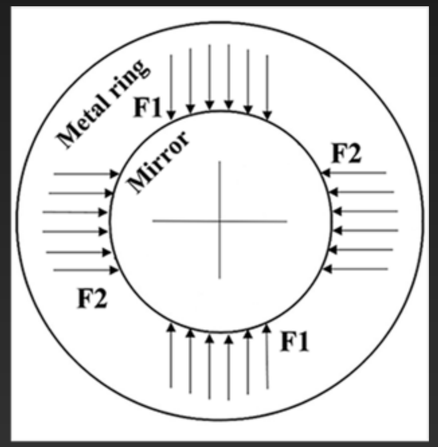

FEM results: PROMISING

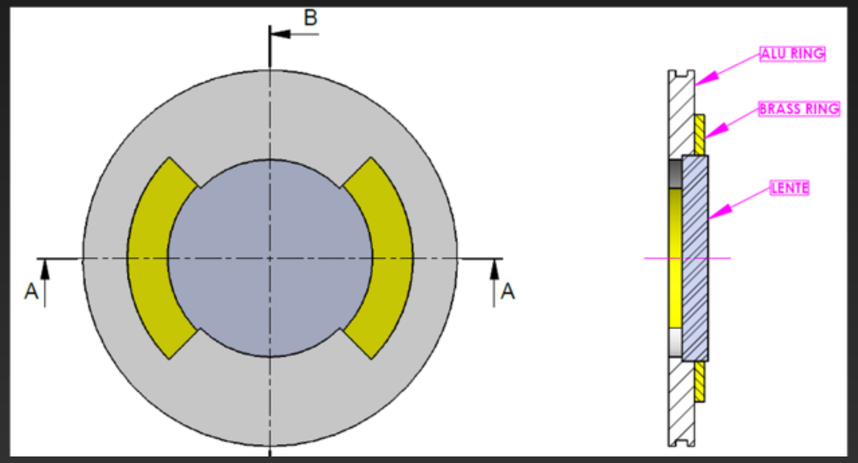

University of Trento

Collaboration with University of Napoli, Federico II: Alcide Bertocco, Matteo Bruno and Luca Esposito

Wavefront control (O5 - Post O5)

Astigmatism Corrections

Idea

•Different contact pressures distributions will produce differences in curvature

University of Trento

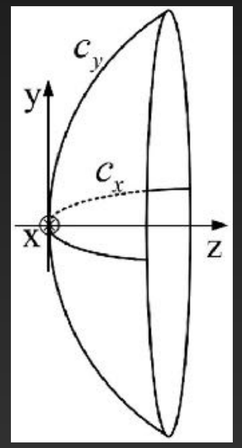

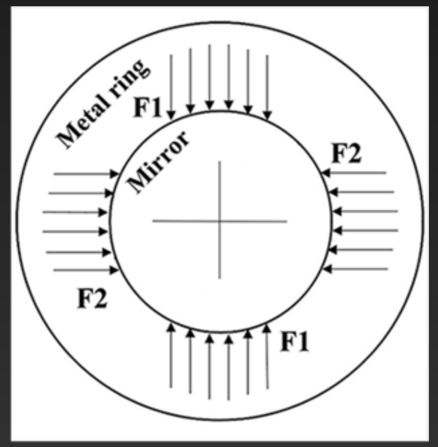

Collaboration with University of Napoli, Federico II: Alcide Bertocco, Matteo Bruno and Luca Esposito

FEM results: PROMISING

Defocus on xx and yy axis can be modified changing the elastic material properties and the initial interference

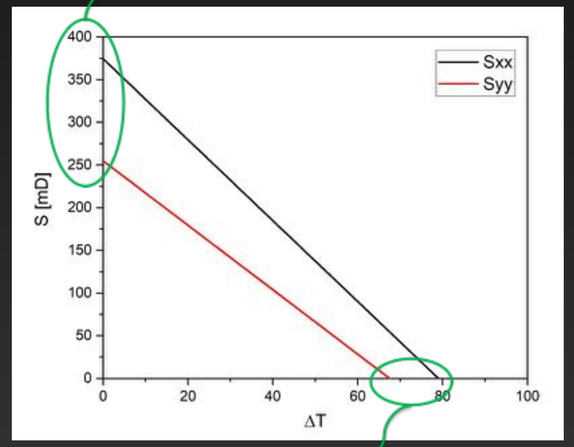

Tuning on CTE and interference

Wavefront Sensing

Advanced Gravitational Wave detectors

Wavefront Sensing

Hartmann

- Measures changes in surfaces with a probe beam
- Differential measurement
  - Need a reference wavefront
  - Any deviations from the references will be collected on a CCD camera

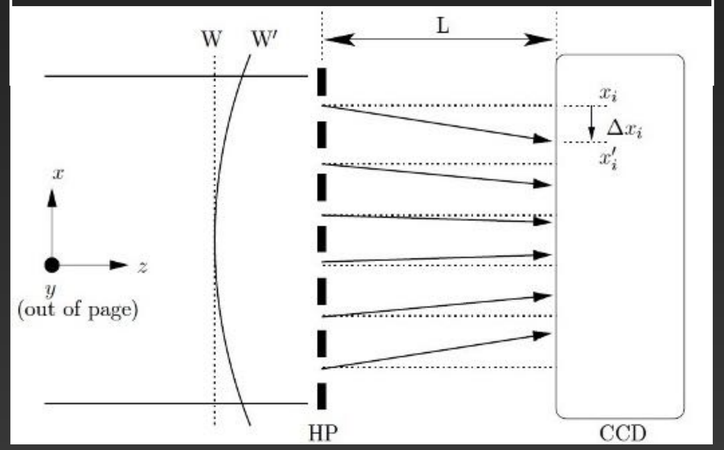

Laura van der Schaaf
VIR-0489A-20

Phase camera

- Provide informations about mode content without a probe beam
- The photodiode measures the beat between the reference beam and the interferometer beam
- The interferometer beam is scanned over a photodiode

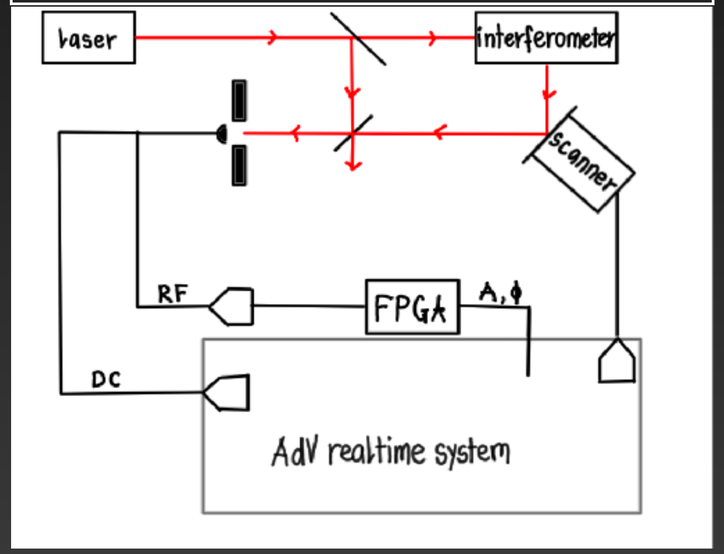

Advanced Gravitational Wave detectors

Additional Wavefront Sensors

Spatial Light Modulation (SLM) based phase camera

- Set of micro mirrors arranged in a grid
  - Each mirror can move to change the path length
  - The spatial position is encoded in the phase and the wavefront can be reconstructed

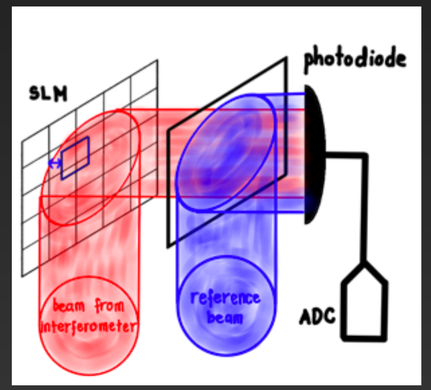

VIR-0489A-20

Time of flight camera

- Source
  - Wave emission
- Receiver
  - Capture the wave bounced back from the surface to be imaged sampled with a pixel array
- Measurement of the phase difference between the two waves at each sampled time and reconstruction of the wavefront

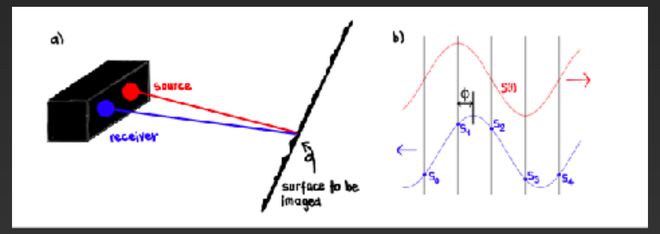

VIR-0489A-20

Shearing interferometer

- Birifrangent uniaxial crystal
  - The refraction angle depends on the polarisation
- EOM to modulate the light
  - Separation of DC term from interference
- CMOS camera
  - Collect data and wavefront reconstruction
  - Only change in phase with respect of time t

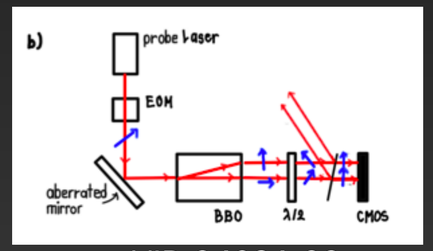

VIR-0489A-20

Advanced Gravitational Wave detectors

Additional Wavefront Sensors

Spatial Light Modulation (SLM) based phase camera

- T. Ralph, A. Altin, D. FRabeling, D. Mc Clelland and D. Shaddock. Interferometric wavefront sensing with a single diode using spatial light modulation. Appl. Opt., 56(8):2353–2358, Mar 2017

Time of flight camera

- L. Li. Time-of-Flight Camera – An Introduction. Technical report, Texas Instruments, 2014
- Muniz et al., Phys. Rev. D, 104, 042002, (2021)

Shearing interferometer

- P. Beyersdorf and M. Codier. Measurement of Thermo-Elastic Deformation of an Optic using a Polarization Based Shearing Interferometer. arXiv:1209.1333 [physics.optics], 2012.

Comparison

sensor	phase resolution	sensitivity for sidebands	image points	frame rate
Shearing interferometer	$\lambda/160$	cannot distinguish		0.04 Hz
Hartmann sensor	$\lambda/2000$	cannot distinguish	1,024×1,024	$\geq$ 57 Hz
Time of flight camera	$\lambda/500$ [88]	one field at a time	200×200	kHz
Phase camera	$< \lambda/500$	all fields simultaneously	$\geq$16,384	Hz
SLM based phase camera	$< \lambda/500$	all fields simultaneously	12×12	200 Hz [82]

VIR-0489A-20

Advanced Gravitational Wave detectors

Mode Matching error-signals techniques

Error signals for Mode Matching are necessary for future gravitational wave detectors

Bullseye photodiodes

- G. Mueller, Q.-z. Shu, R. Adhikari, D. B. Tanner, D. Reitze, D. Sigg, N. Mavalvala, and J. Camp, "Determination and optimization of mode matching into optical cavities by heterodyne detection," Opt. Lett. **25**, 266–268 (2000).

Beat between modulated Carrier and unmodulated second order transmitted beam

Mode-converter telescope

- F. Magaña-Sandoval, T. Vo, D. Vander-Hyde, J. R. Sanders, and S. W. Ballmer, "Sensing optical cavity mismatch with a mode-converter and quadrant photodiode," Phys. Rev. D **100**, 102001 (2019).

Beat between modulated Carrier and unmodulated second order transmitted beam

Beam shape modulation

- A.A. Ciobanu, D.D. Brown, P.J. Veitch, and D.J. Ottaway, "Mode matching error signals using radio-frequency beam shape modulation," App. Optics. 10.1364, (2021)

Beat between second order sideband and zero-order carrier

Future

- Further improvement on active wavefront control and sensing
- Closed loop Mode matching system

  - Can we extend the sensing of the mode matching to astigmatism?

...Thank you