# Four top quark production in SMEFT

**to appear soon**

in collaboration with
Rafael Aoude, Fabio Maltoni, Eleni Vryonidou

**Hesham El Faham**
**hesham.elfaham@vub.be**

Vrije Universiteit Brussel and Université Catholique de Louvain, Belgium

ICHEP 2022, Bologna, July 7, 2022

# Outline

- Four tops in a nutshell
- Why handle four tops with care?
- What did we do about four tops?
- Selection of results

# Four tops in a nutshell

- A rare process with $\sigma_{LO}^{SM} \sim 7$ fb and $\sigma_{NLO}^{SM} \sim 12$ fb $\pm 20\%$ at $\sqrt{s} =$ 13 TeV R. Frederix, D. Pagani, M. Zaro [1711.02116]
- Experiment; ATLAS: $24^{+7}_{-6}$ fb, CMS: $12.6^{+5.8}_{-5.2}$ fb

# On the history of being careful

- 2016, Q-H Cao, S-L Chen, Y. Liu [1602.01934];
  "…careful at LO SM"
- 2017, R. Frederix, D. Pagani, M. Zaro [1711.02116];
  "…careful at NLO SM"
- 2020, C. Degrande, G. Durieux, F. Maltoni, et al. [2008.11743];
  "…careful at SMEFT, for some operators"
- 2022, R. Aoude, H.F, F.Maltoni, E. Vryonidou,
  "…we are **very** careful, for **all** SMEFT operators, for LHC and FCC-hh"

# Why careful?

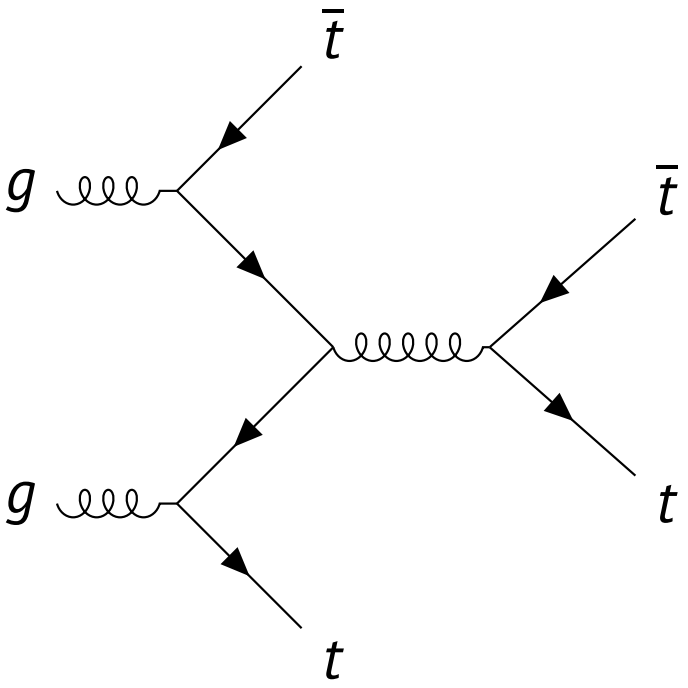


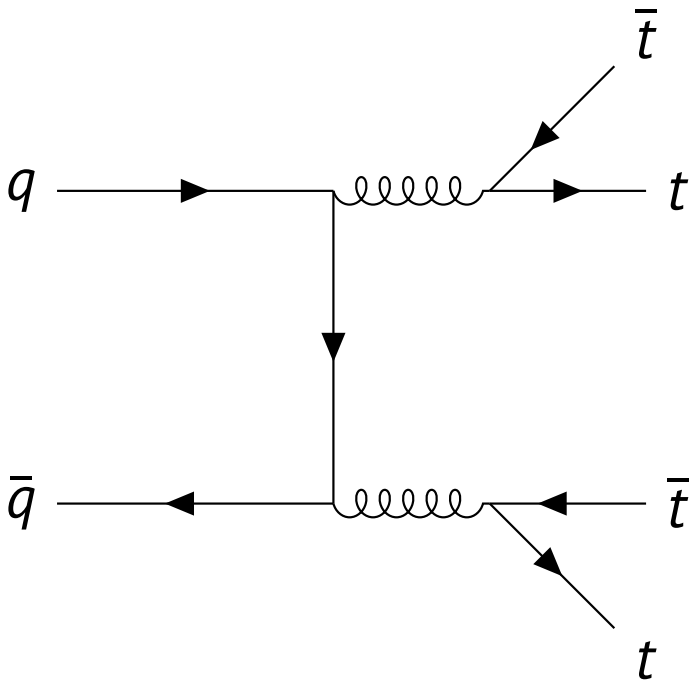


The fully QCD-induced predictions are under-estimating!

# $tt \to tt$ electroweak scattering is important

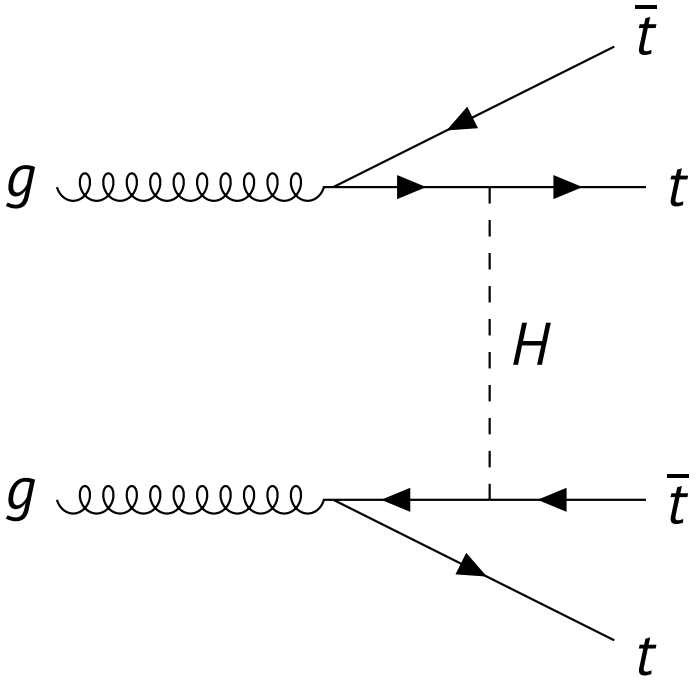


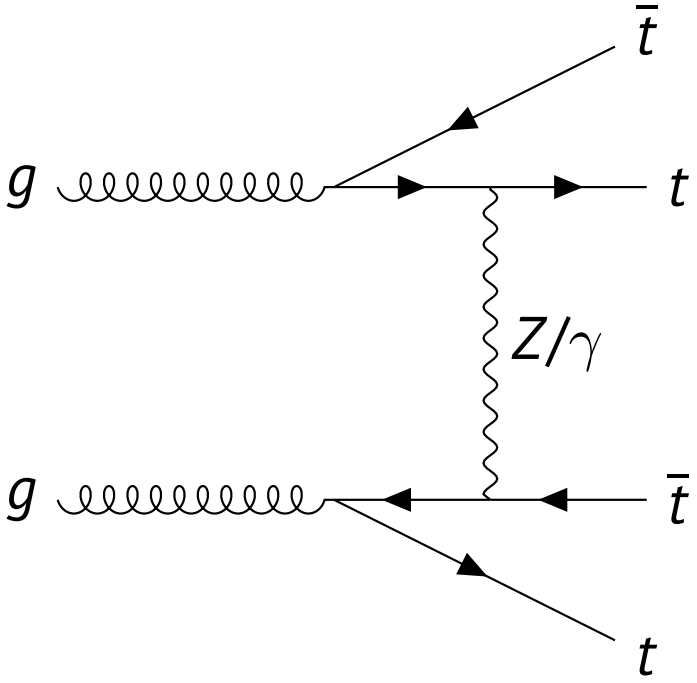


The EW contributions amount to $\sim$ 30% of the pure SM four tops cross-section.

# What did we do?

Include **all** QCD and EW-induced (splitting to $\alpha$ and $\kappa_t$) amplitudes and ...

- obtain four tops inclusive and differential predictions for **all** potential SMEFT operators at LHC and FCC-hh
  - four-fermion
  - two-fermion
  - purely-bosonic
- project the EFT sensitivity at FCC-hh
- toy fit to ATLAS and CMS inclusive rates
- examine double dimensions-six insertions

# What we present here?

Include **all** QCD and EW-induced (splitting to $\alpha$ and $\kappa_t$) amplitudes and ...

- obtain four tops inclusive and differential predictions for **all** potential SMEFT operators at LHC ~~and FCC-hh~~
  - four-fermion
  - two-fermion
  - purely-bosonic
- ~~project the EFT sensitivity at FCC-hh~~
- ~~toy fit to ATLAS and CMS inclusive rates~~
- ~~examine double dimensions-six insertions~~

# Depicting SMEFT

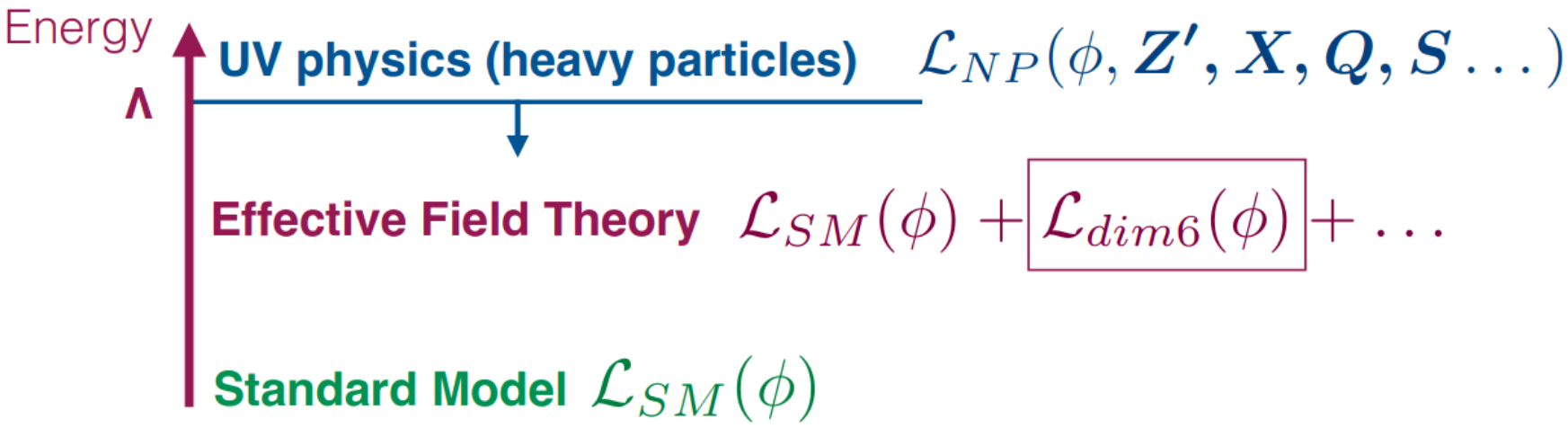


©Eleni Vryonidou

# Depicting SMEFT

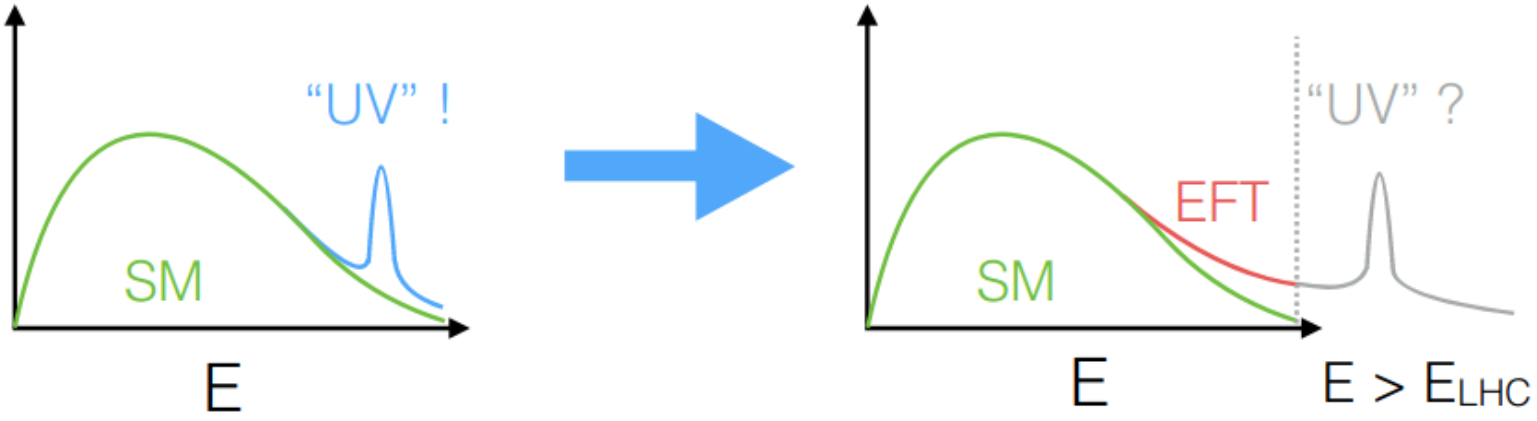


©Ken Mimasu

- Indirect effects of UV in the tails of distributions
- Small effects of EFT require precise measurements and predictions

# Into the SMEFT study: four-fermion

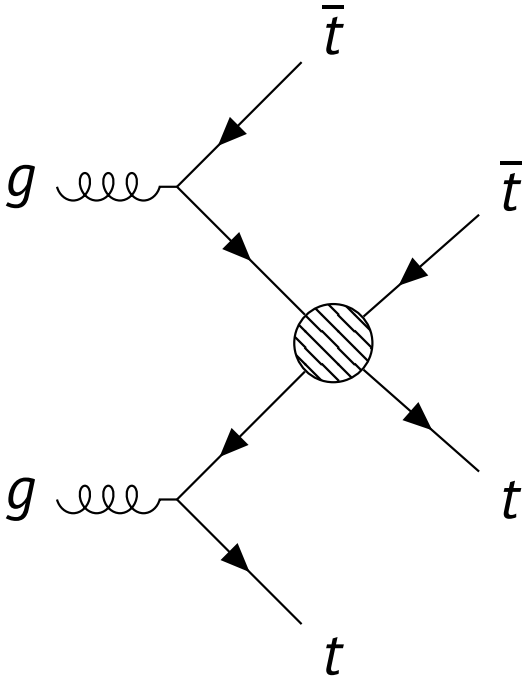


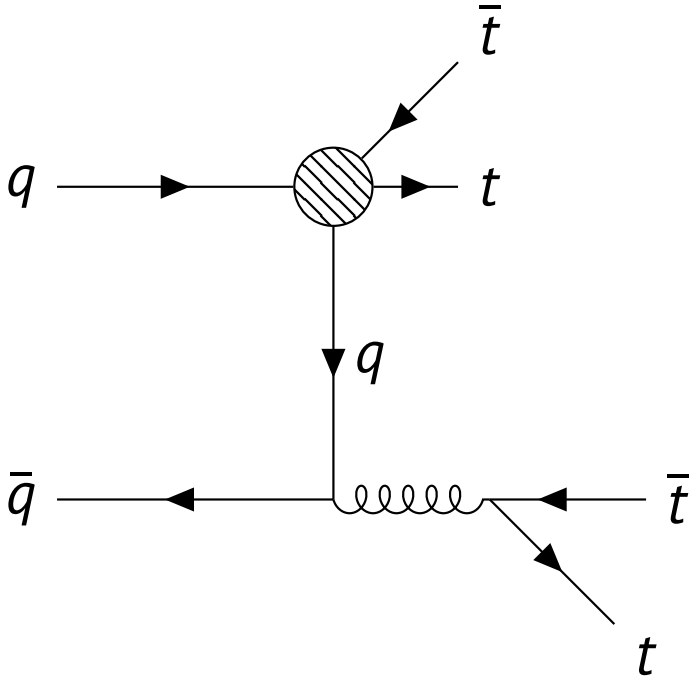


Single insertions of dimension-six four-fermion operators; all **4-heavy (4H)** quark and **2-heavy 2-light (2H2L)** quarks.

# Into the SMEFT study: two-fermion and bosonic

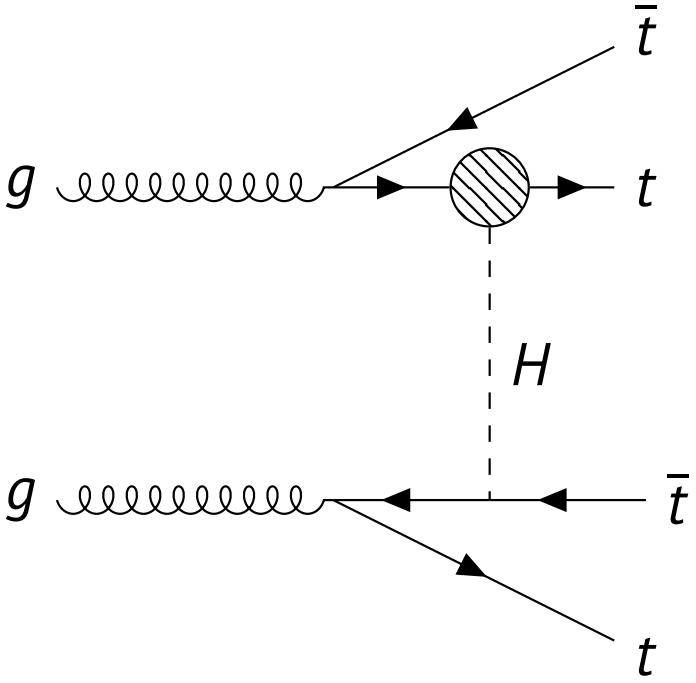


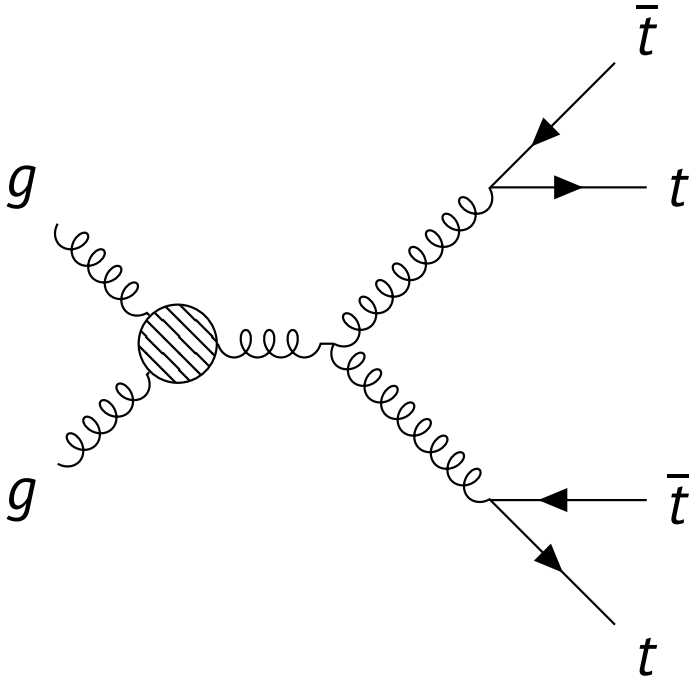


Single insertions of dimension-six two-fermion and purely bosonic operators;

$$\{\mathcal{O}_{t\varphi}, \mathcal{O}_{tZ}, \mathcal{O}_{tW}, \mathcal{O}_{tG}, \mathcal{O}_{\varphi Q}^{(-)}, \mathcal{O}_{\varphi t}, \mathcal{O}_{G}, \mathcal{O}_{\varphi G}\}. \tag{1}$$

# Gearing up ...schematically

In the presence of dimension-six SMEFT operators, the scattering amplitude reads

$$\mathcal{A} = \mathcal{A}_{\mathrm{SM}} + \frac{1}{\Lambda^2}\mathcal{A}_{(\mathrm{d6})} + \mathscr{O}(\Lambda^{-4}), \tag{2}$$

leading to the partonic differential cross-section

$$d\sigma = d\sigma_{\mathrm{SM}} + \frac{1}{\Lambda^2} d\sigma_{\mathrm{int}} + \mathscr{O}(\Lambda^{-4}). \tag{3}$$

Lets just focus on the linear interference

$$\begin{aligned} d\sigma_{\mathrm{int}} &= d\sigma_{\mathrm{int},gg} + d\sigma_{\mathrm{int},qq} \\ &\sim 2\Re\left(\mathcal{A}_{\mathrm{SM},gg}\,\mathcal{A}^{\dagger}_{\mathrm{EFT},gg}\right) + 2\Re\left(\mathcal{A}_{\mathrm{SM},qq}\,\mathcal{A}^{\dagger}_{\mathrm{EFT},qq}\right). \end{aligned} \tag{4}$$

# Gearing up ...

Do some work and then write the cross-section

$$d\sigma_{\mathrm{int},gg,[4F]} = \alpha_s^3\, d\sigma_{\mathrm{int},gg}^{(3,0,0)} + \alpha_s^2 \left( \alpha\, d\sigma_{\mathrm{int},gg}^{(2,1,0)} + \kappa_t\, d\sigma_{\mathrm{int},gg}^{(2,0,1)} \right), \tag{5a}$$

$$\begin{aligned} d\sigma_{\mathrm{int},qq,[4F]} &= \alpha_s^3 \ldots \\ &+ \alpha_s^2 \ldots \\ &+ \alpha_s^1 \ldots \\ &+ \alpha_s^0 \ldots . \end{aligned}$$

**The total interference cross-section:**

$$\sigma_{\mathrm{incl.}} = \sigma_3 + \sigma_2 + \sigma_1 + \sigma_0. \tag{6}$$

where $\sigma_3$ is the cross-section induced from all terms with $\alpha_s^3$, etc.

# 4-heavy inclusive predictions

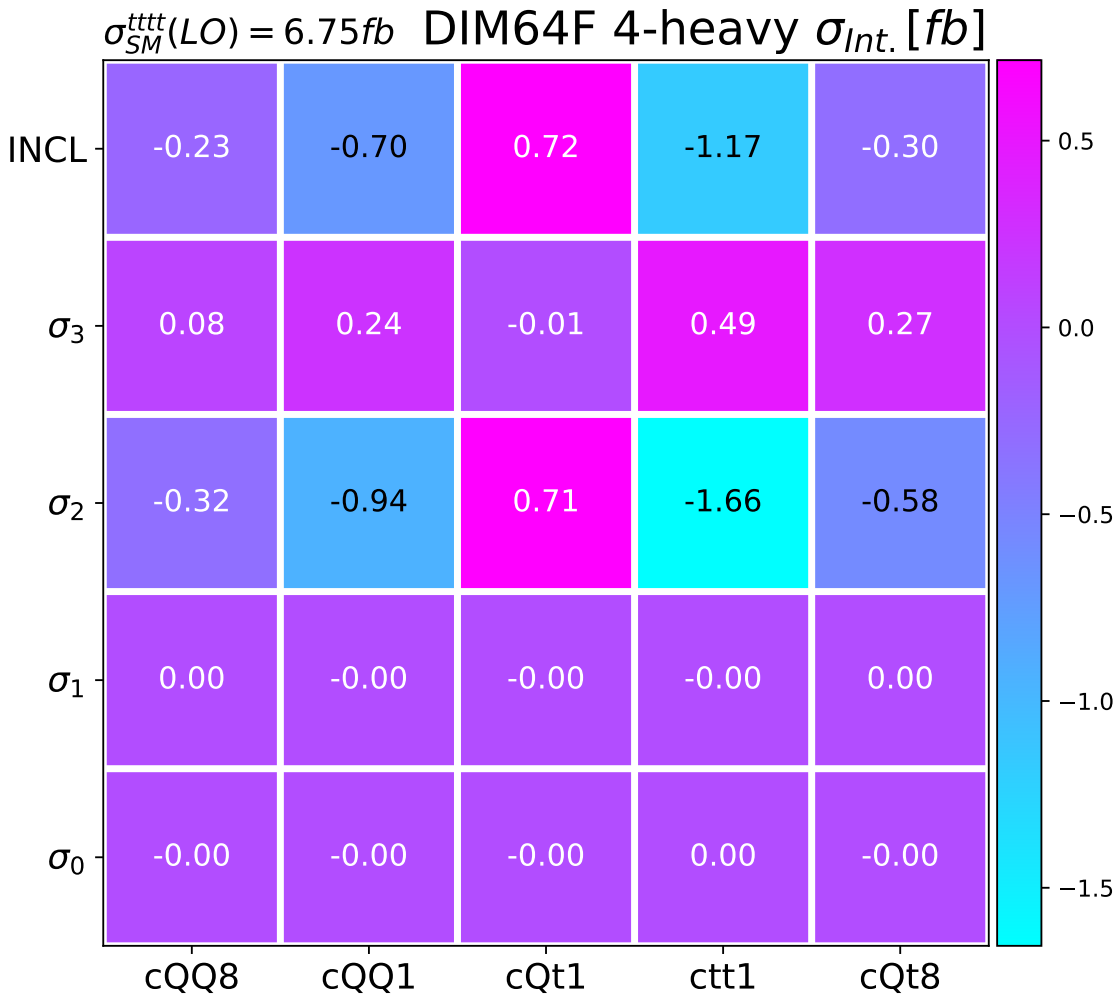


- $\sigma_2$ is dominant in **all** 4-heavy $\rightarrow$ '**non**-naive'
- Formal sub-leading terms dictate the sign of the interference

# 2-heavy inclusive predictions

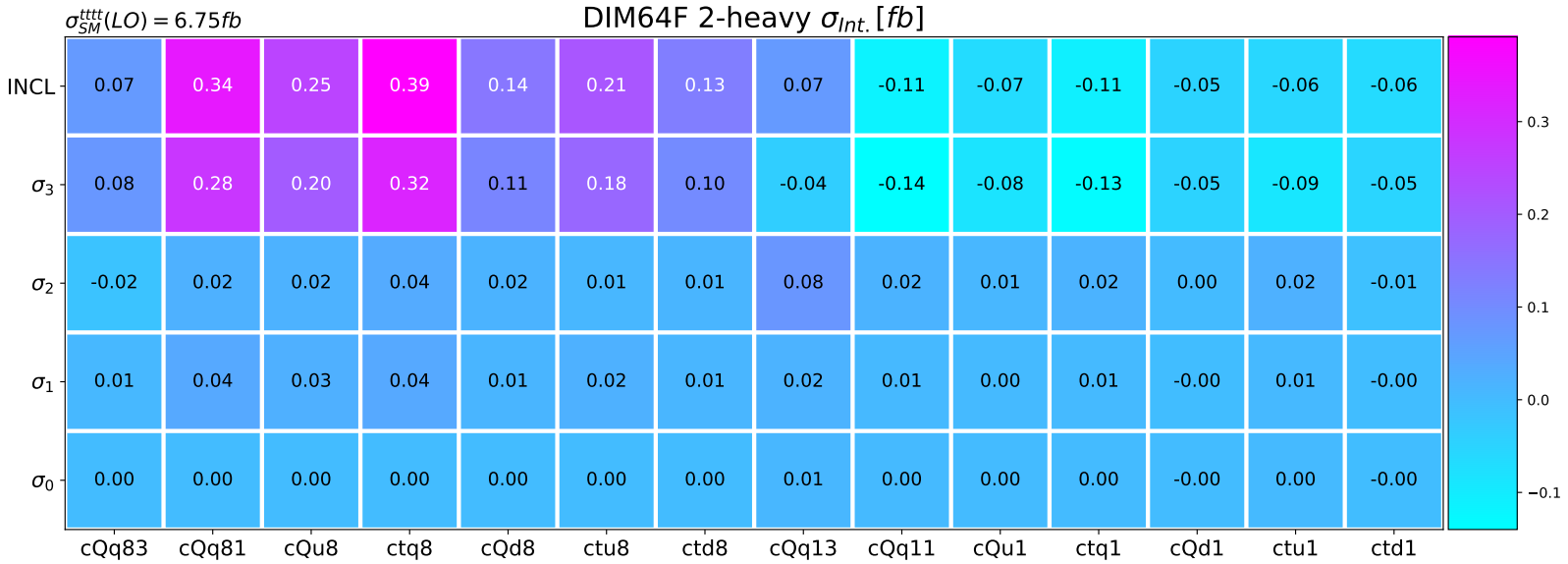


- Almost all 2-heavy 2-light are ‘naive’ operators
- All enter in $qq$-induced production

# 2F and 0F inclusive predictions

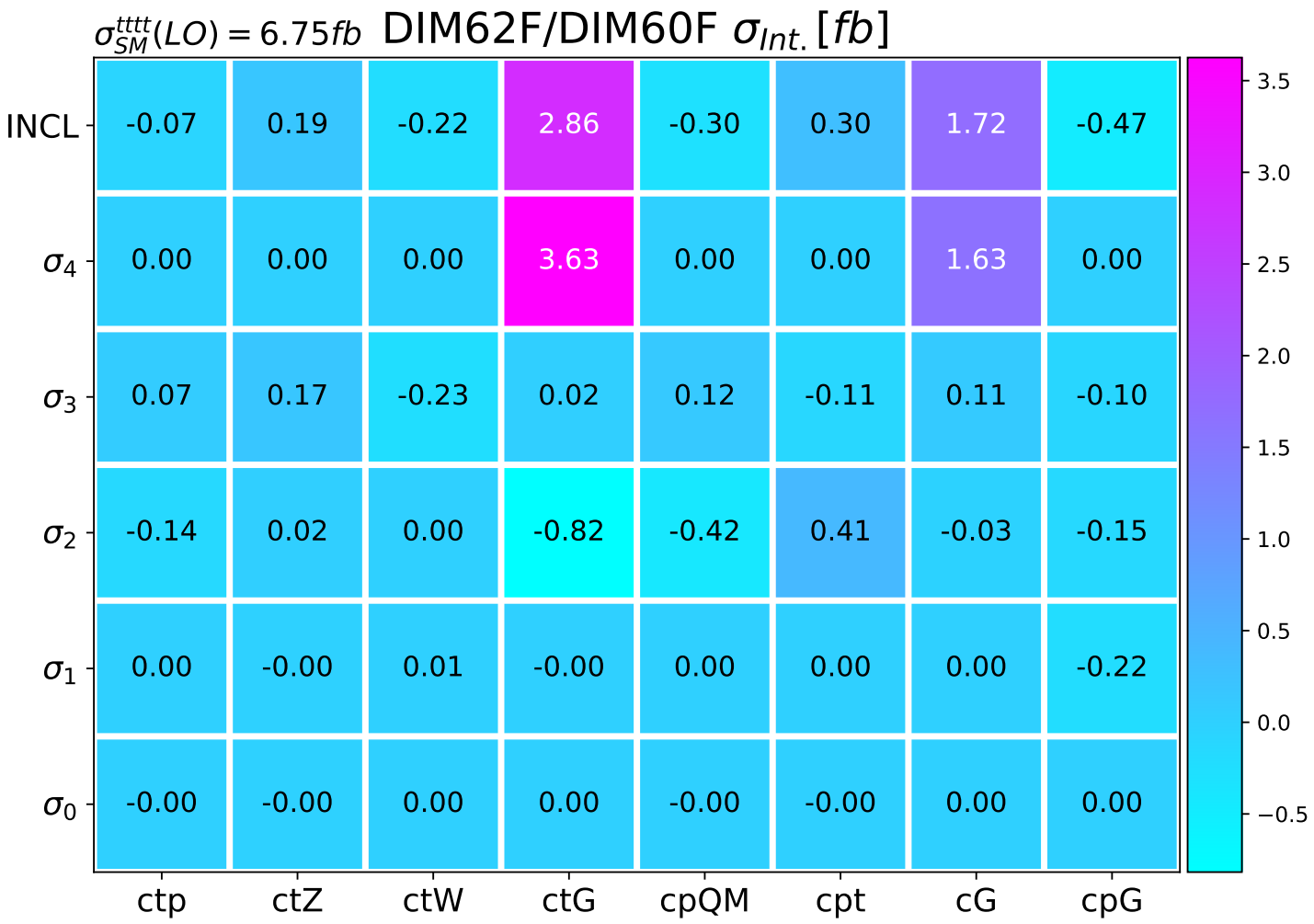


Non-four-fermion operators can also be ‘**non**-naive’.

# A glimpse on 4-heavy differential predictions

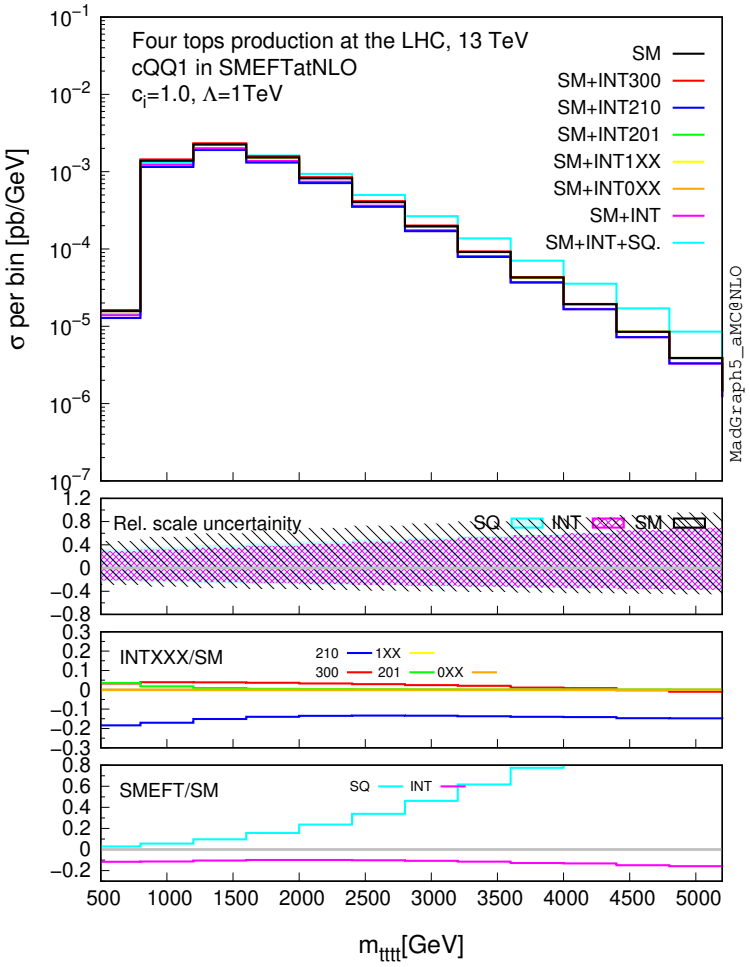


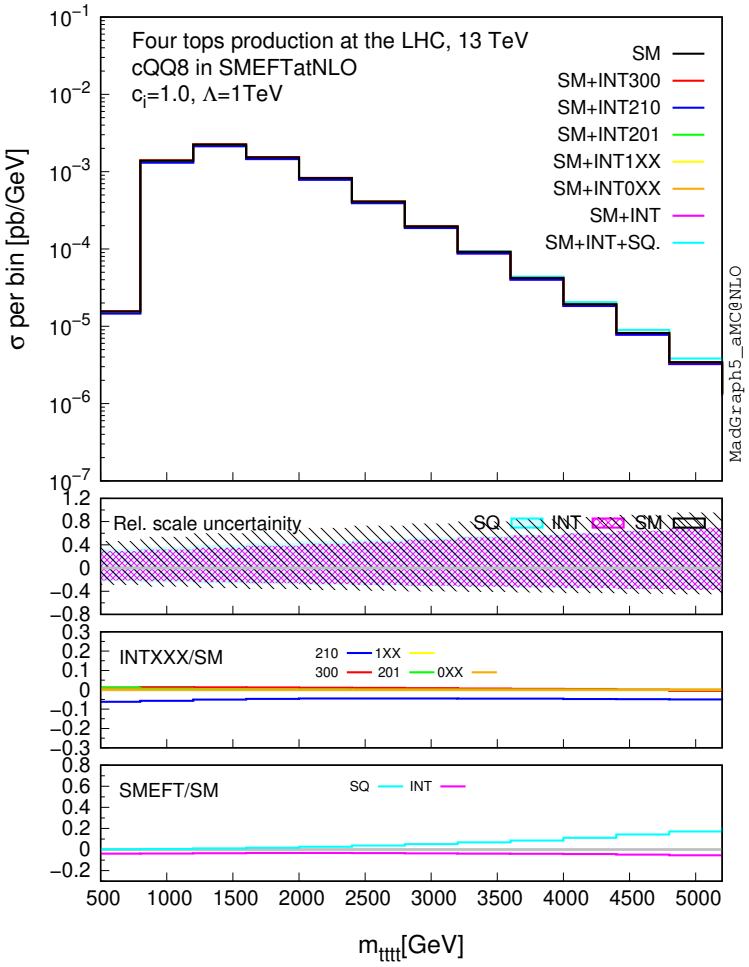


- $Z/\gamma$ contributions $>$ top-Yukawa $>$ $g$-induced
- Interference growth with $\sim \sqrt{s}$, yet slight

# …and on the non-naive 2F and 0F

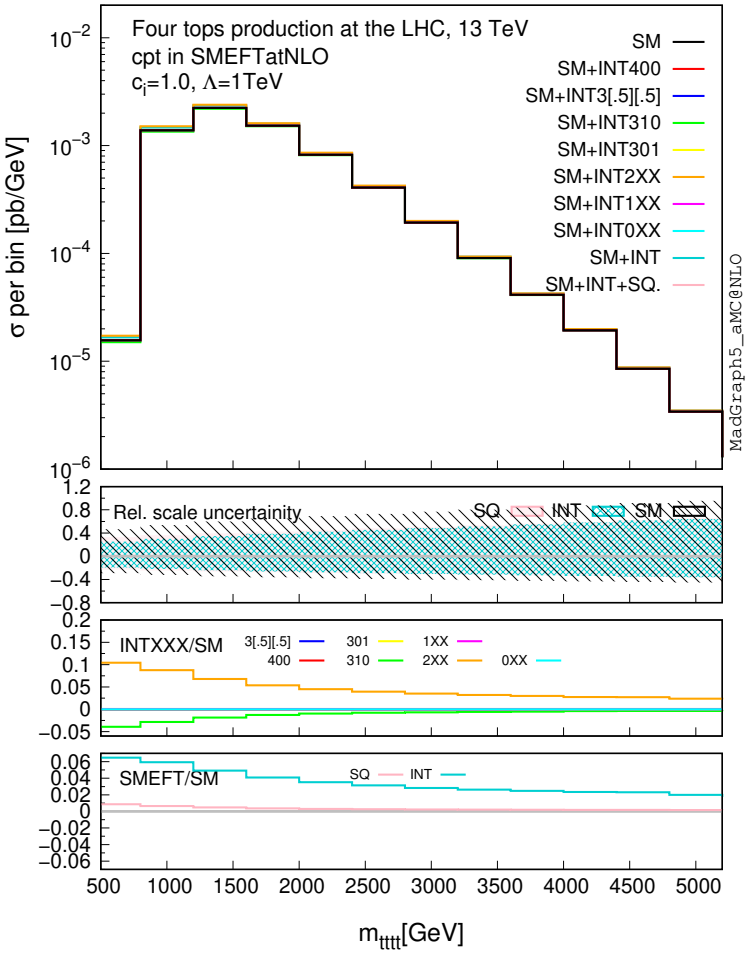


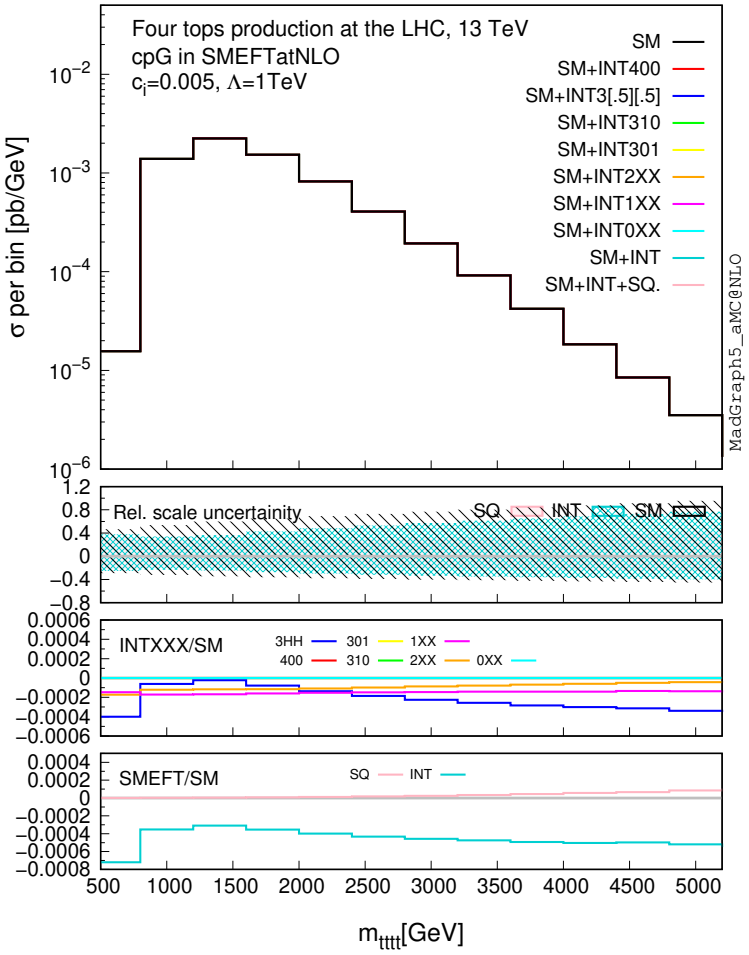


Decaying interference and almost constant quadratics, from the amplitudes scaling with $\sim \sqrt{s}$.

# Summary

- Presented a SMEFT study of four tops considering all QCD and EW-induced amplitudes
- EW amplitudes are further split into top-Yukawa- and QED-induced ones
- We defined a set of '**non**-naive' operators for which formal sub-leading terms can not be neglected

$$\textit{all}\ \text{4-heavy} \qquad \text{and} \qquad \{\mathcal{O}^{3,1}_{Qq}, \mathcal{O}_{t\varphi}, \mathcal{O}_{tG}, \mathcal{O}^{(-)}_{\varphi Q}, \mathcal{O}_{\varphi t}, \mathcal{O}_{\varphi G}\}$$

- Found few cases where even formal sub-sub-leading terms should be accounted for
- Four tops LHC studies are key in constraining 4-heavy operators

# Backup

# Rest of 4-heavy

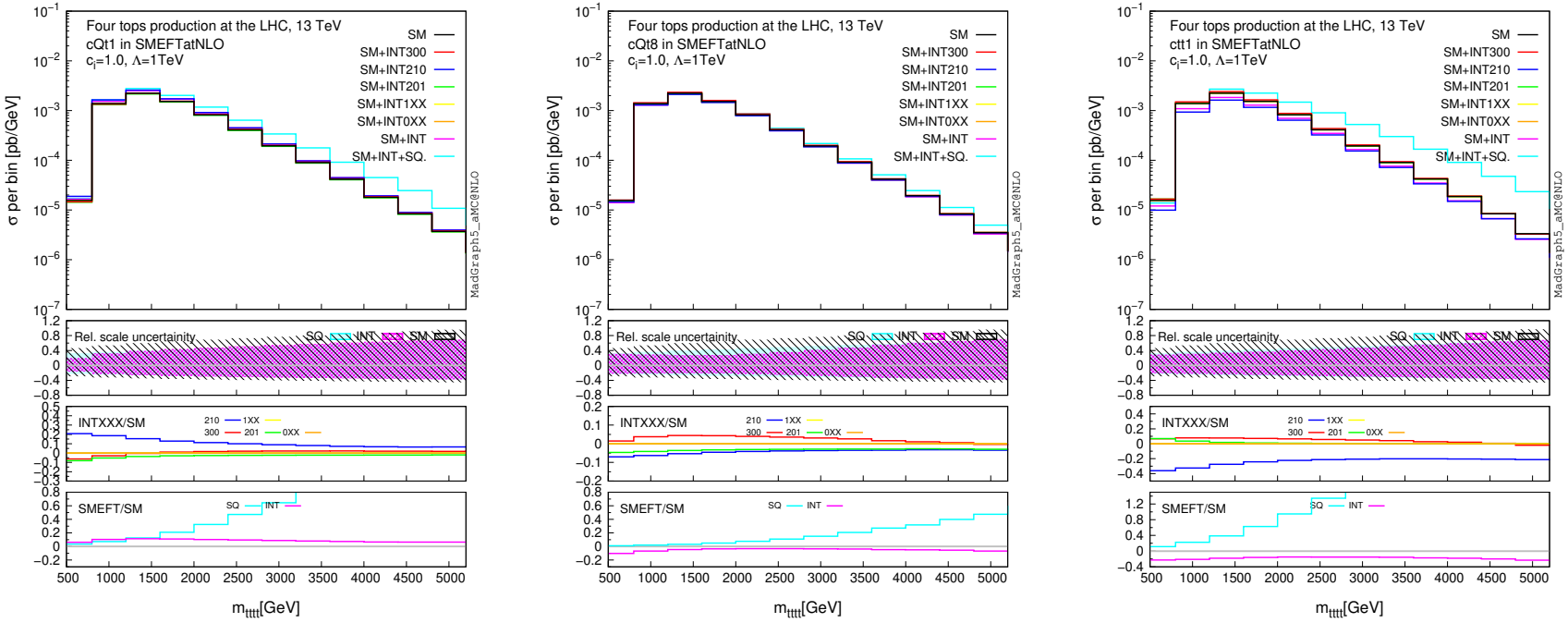


Same behaviour across the board for 4-heavy.

# ...and of the non-naive 2F and 0F

**coefficients approximate values extracted from [2105.00006]**

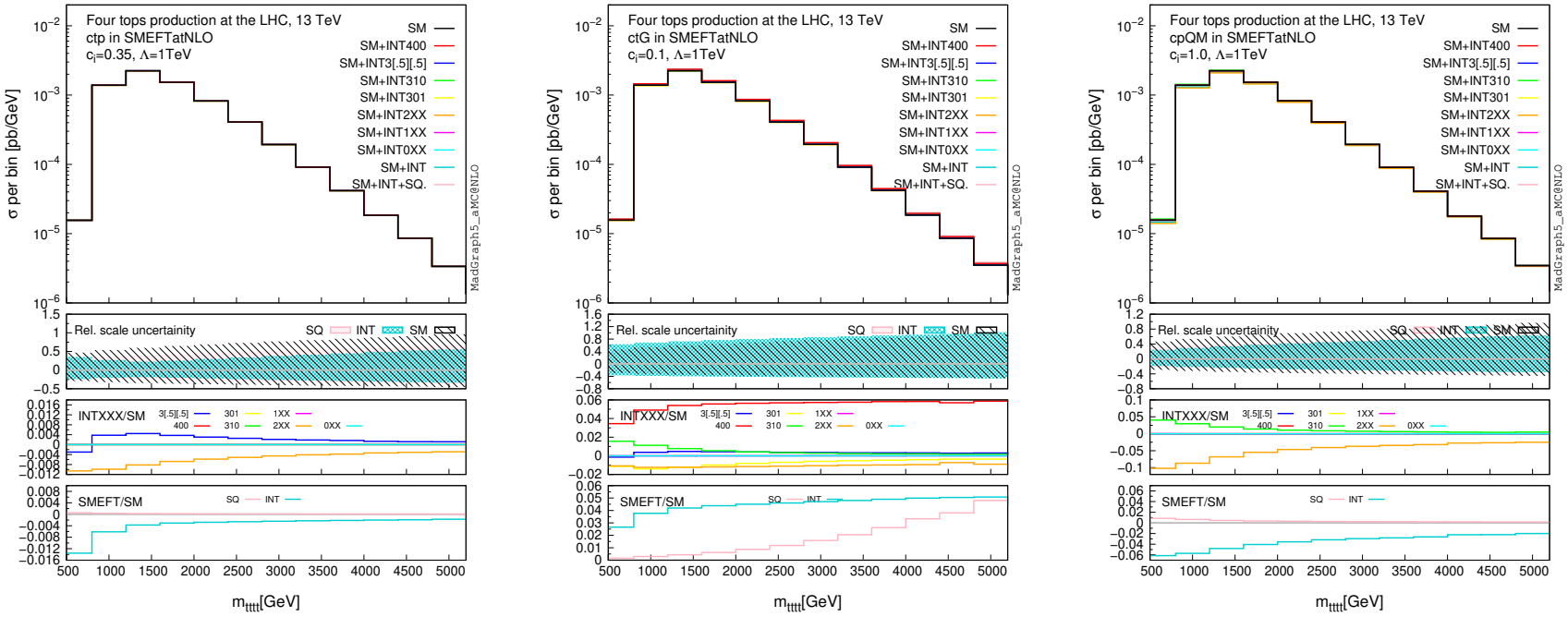

# On singlets and octets

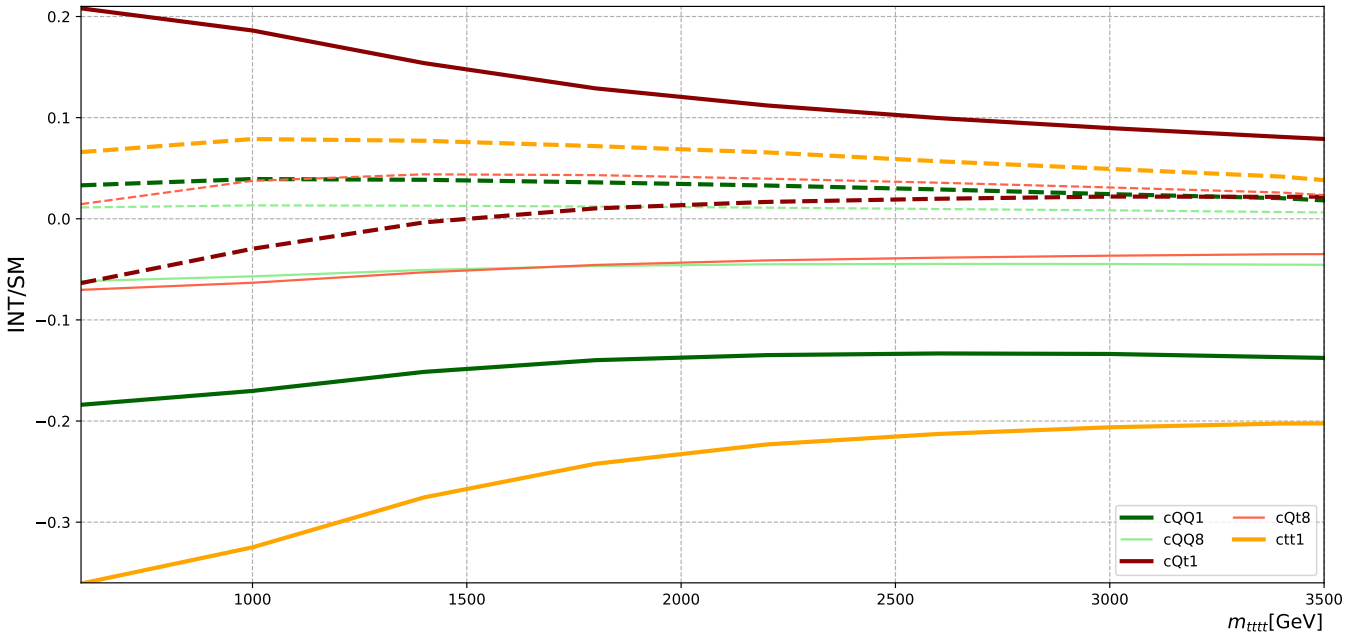


Colour-singlets exhibit a stronger interference strength compared to octets, due to EW enhancement.