4th LNF Workshop on Cylindrical GEM Detectors

The BESIII CGEM-IT : Mechanical Design

Mauro Savrié
On behalf of BESIII CGEM group

The BES III Detector

- E=1-2.3 GeV
- $L_p=10^{33}$ $cm^{-2}s^{-1}$
- I≅0.9 A, 93 bunches
- $\Delta E \cong 5 \bullet 10^{-4}$

- BES III takes data Since 2009

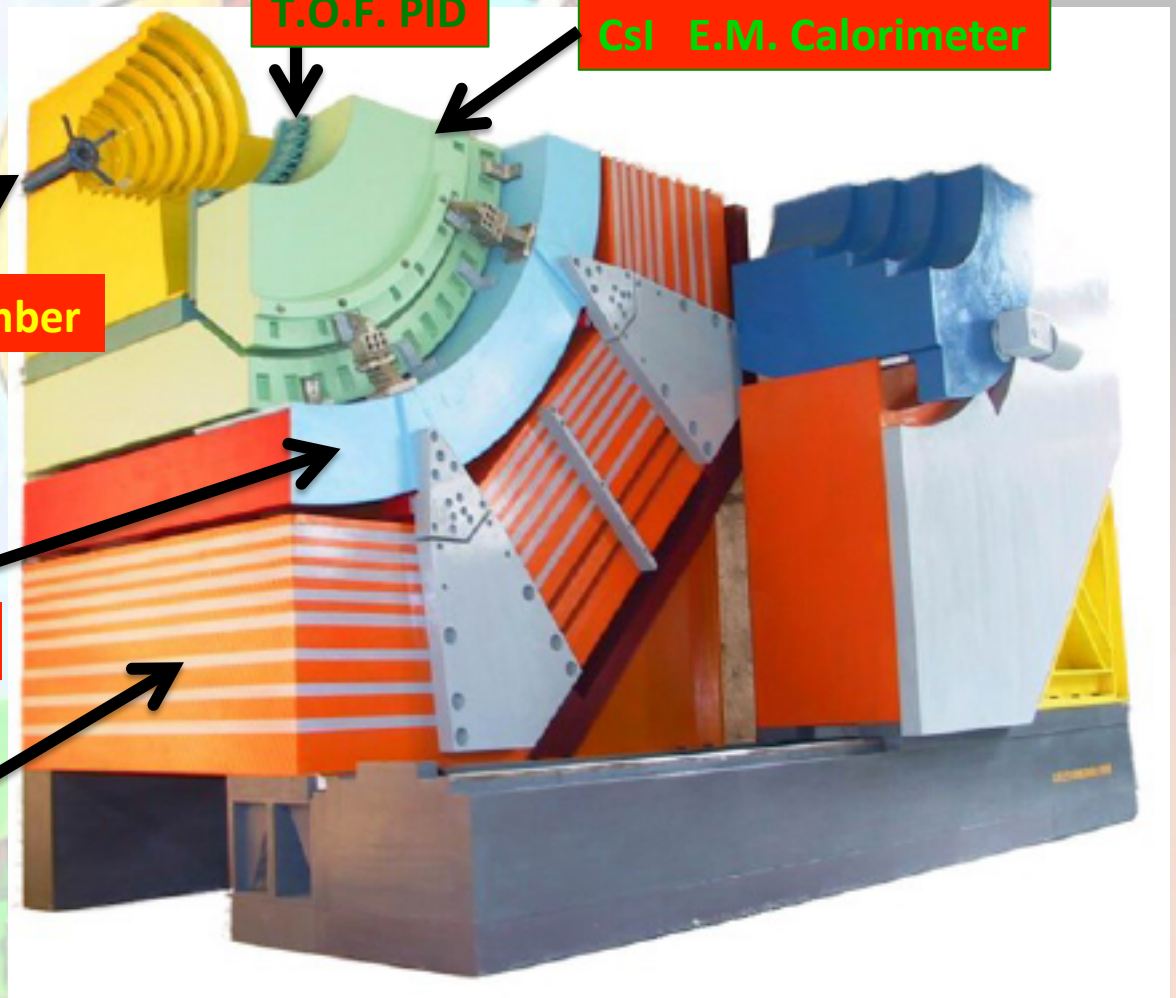

MDC Aging

The gains of the first 10 layers:
experiences an expected decrease

Gain drop in of first 5 layers:
→ decrease of about 16% -29%

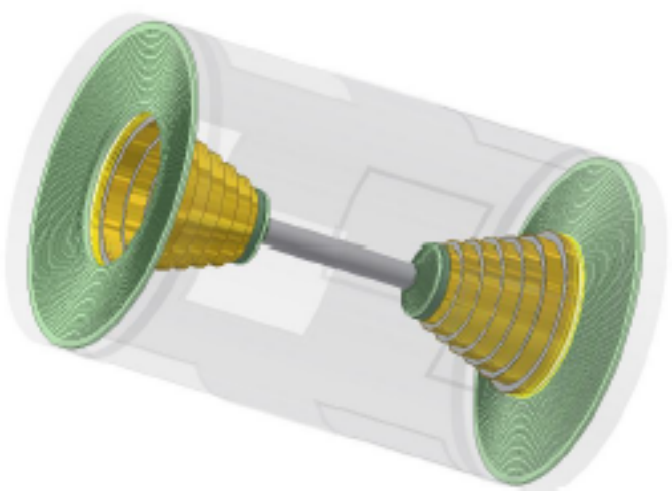

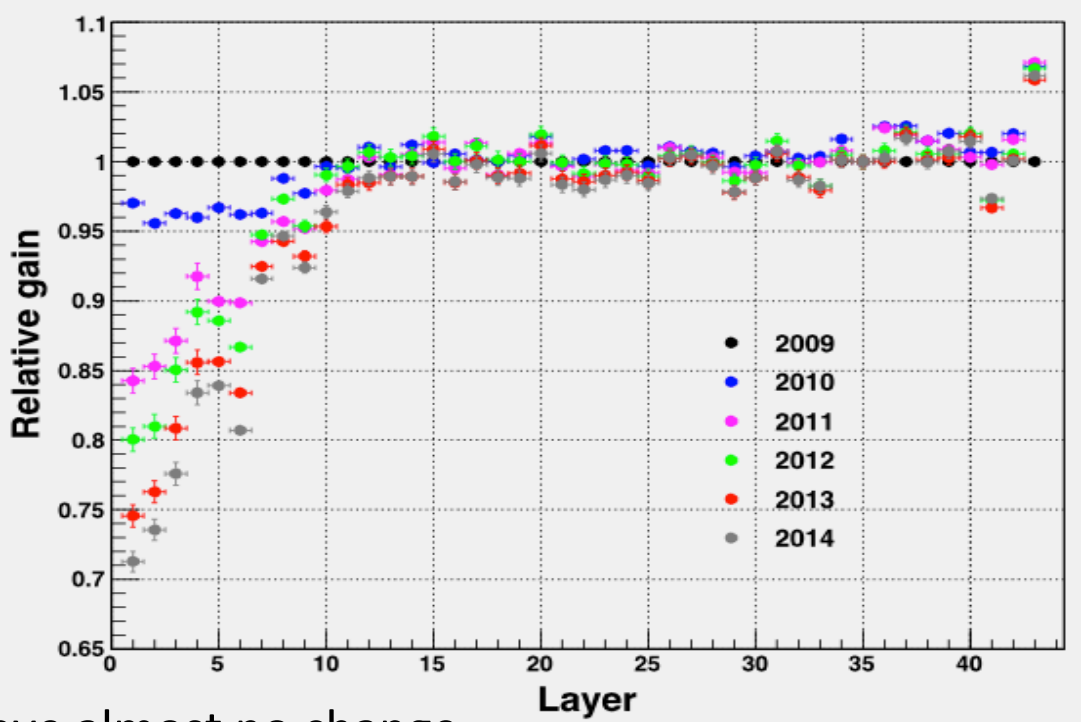

- The gains of the outer layers have almost no change
- The gain in the first 10 layers decreases with a rate of about (3%- 4%)/year

Triple GEM system

The GEM (Gas Electron Multiplier) [F.Sauli, NIM A386 (1997) 531] is a thin (50 μm) metal coated by a kapton foil perforated by a high density of holes (70 μm diameter, pitch of 140 μm) → standard photo-lithographic technology.

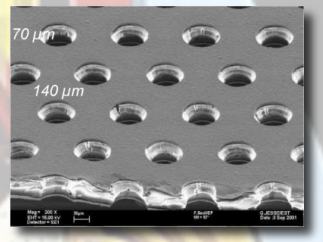

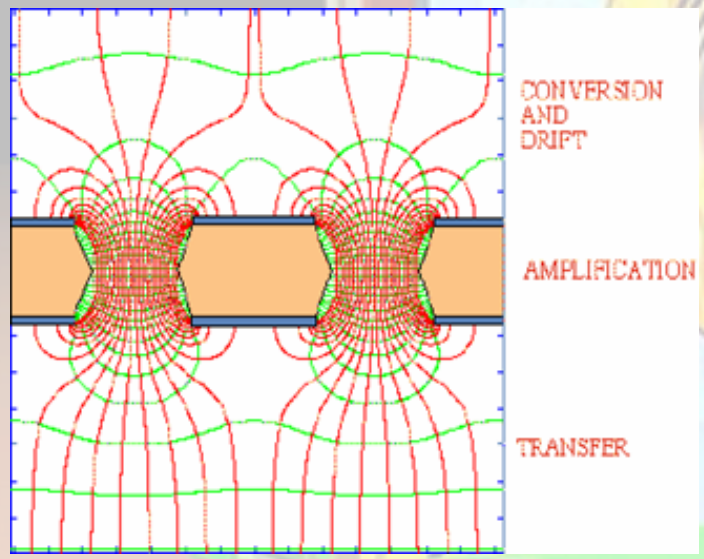

By applying 400-500 V between the two copper sides, an electric field as high as ~100 kV/cm is produced into the holes which act as multiplication channels for electrons produced in the gas by a ionizing particle.

Gains up to 1000 can be easily reached with a single GEM foil. Higher gains (and/or safer working conditions) are usually obtained by cascading two or three GEM foils.

A Triple-GEM detector is built by inserting three GEM foils between two planar electrodes, which act as the cathode and the anode.

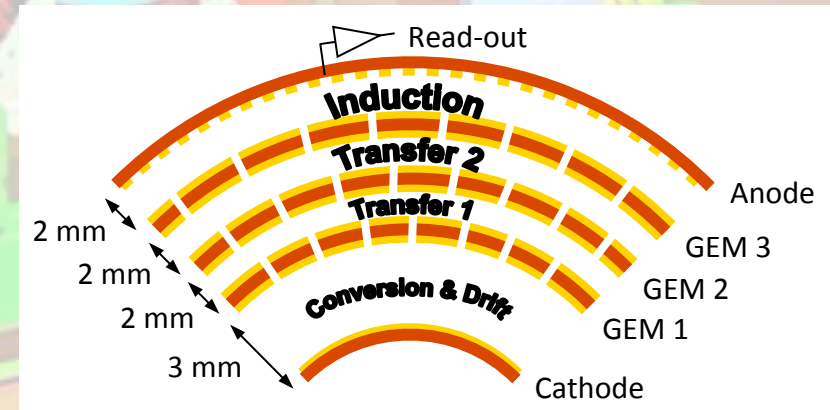

BESIII geometry

The new CGEM-IT detector

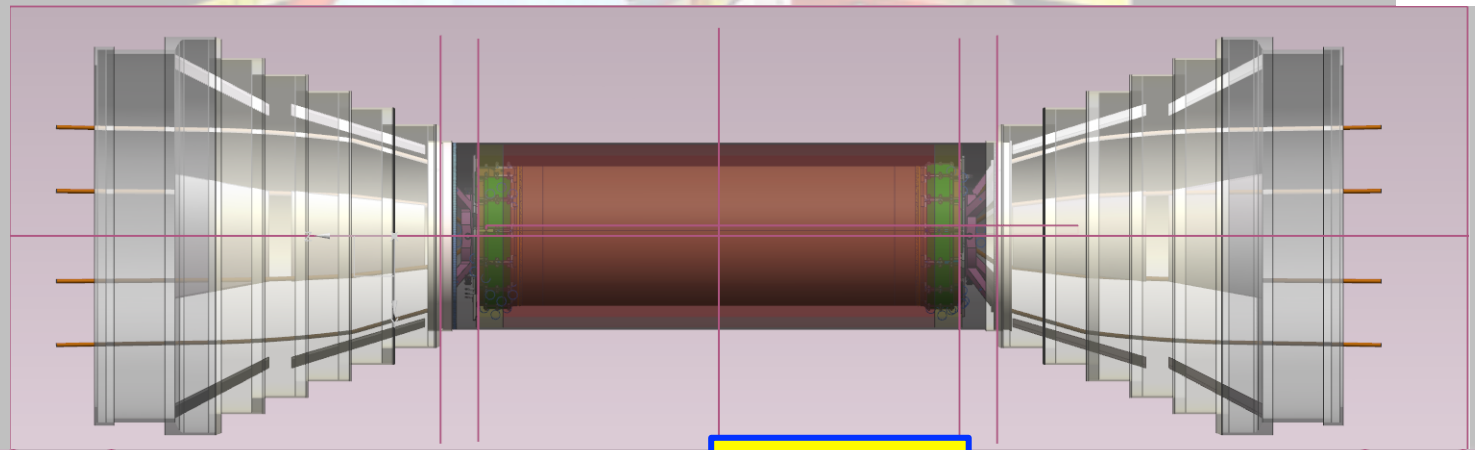

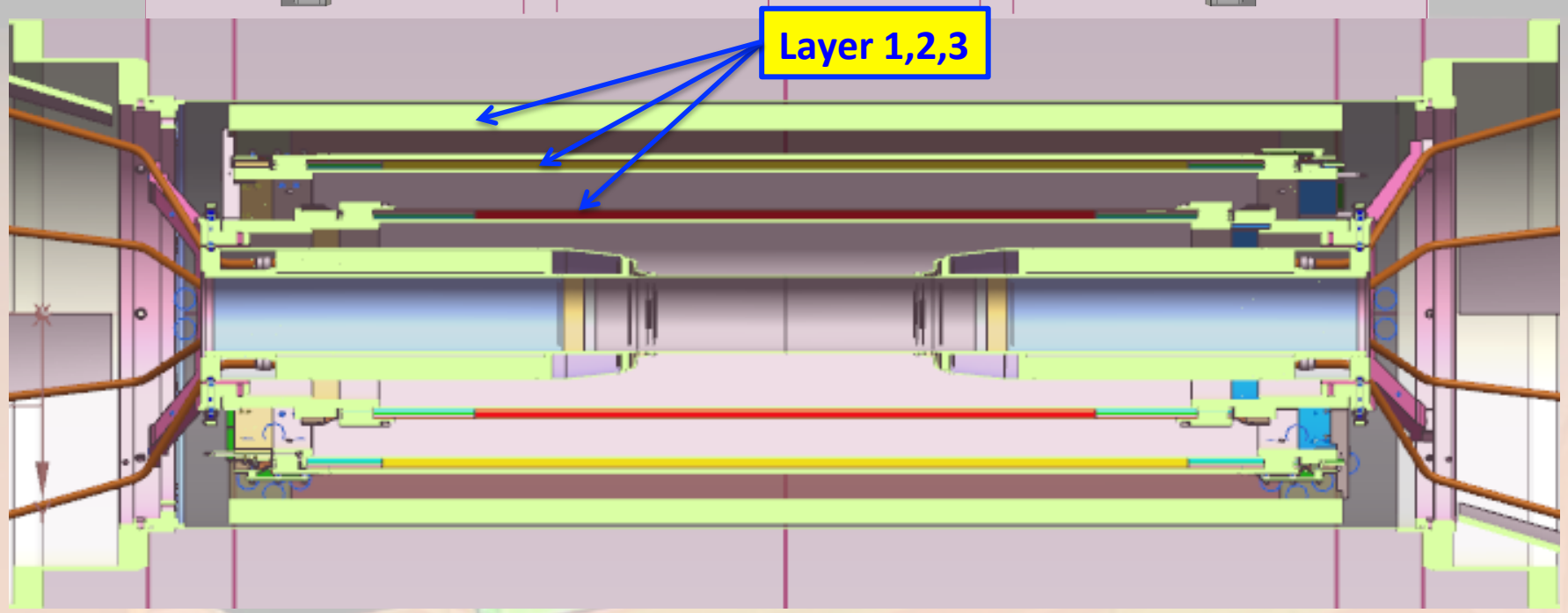

CGEM-IT

structure and features

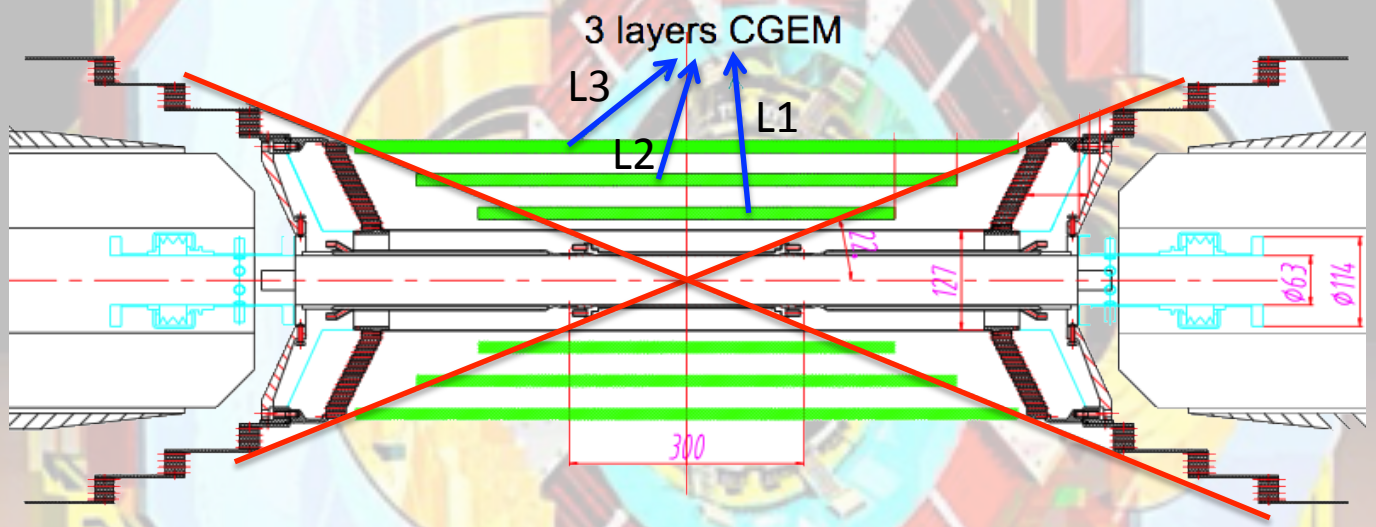

- **Rate capability: ~10^4 Hz/cm^2**
- **Spatial resolution: σ_{xy} =~120μm : σ_z=~1mm**
- **Momentum resolution:: σ_{pt}/P_t =~0.5% @1GeV**
- **Efficiency =~ 98%**
- **Coverage: ~93% 4π**
- **Material budget <= 1.5% X_0 full detector**
- **Operation duration~5- 8 years**

Active Area:

L1 length: 532 mm

L2 length: 690 mm

L3 length: 847 mm

Inner radius: 78 mm

Outer Radius: 178 mm

CGEM-IT
the sandwich technique

Cathode (& Anode) mechanical structure:
sandwich of Kapton /Rohacell
glued under vacuum

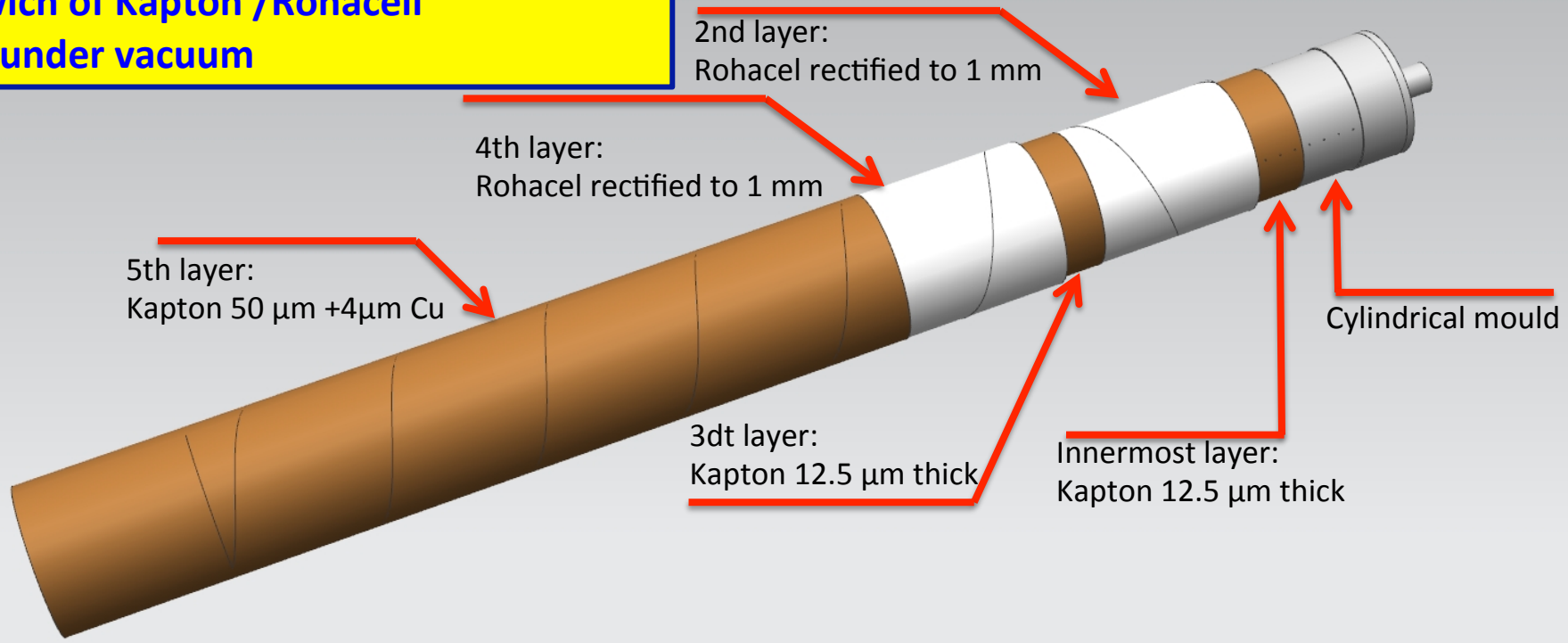

The Rohacell

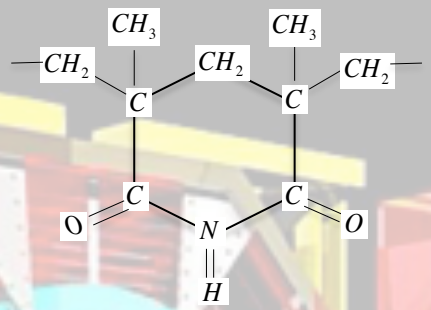

- Poli-Methacrylimide from hot foaming of methacrylic acid and Methacrylonitrile Copolymer
- **Grades :** 31(30 kg/m^3);51(50 kg/m^3);71(70 kgm^3); 110 (110 kg/m^3);170(170 kg/m^3);190(190 kgm^3)

- **Avail. Dim.(mm): 2500*1250 *(2-65 mm)**
- **Very good mechanical properties (closed cells)**
- **Very easy to work on milling machine & Lathe**

ROHACELL® IG/IG-F Properties

Property	Standard	Unit	ROHACELL® 31 IG/IG-F	ROHACELL® 51 IG/IG-F	ROHACELL® 71 IG/IG-F	ROHACELL® 110 IG/IG-F
Density	ISO 845	kg/m³	32	52	75	110
	ASTM D 1622	lbs/ft³	2.00	3.25	4.68	6.87
Compressive Strength	ISO 844	MPa	0.4	0.9	1.5	3.0
	ASTM D 1621	psi	58	130	217	435
Tensile Strength	ISO 527-2	MPa	1.0	1.9	2.8	3.5
	ASTM D 638	psi	145	275	406	507
Shear Strength	DIN 53294	MPa	0.4	0.8	1.3	2.4
	ASTM C 273	psi	58	116	188	348
Elastic Modulus	ISO 527-2	MPa	36	70	92	160
	ASTM D 638	psi	5,220	10,150	13,340	23,200
Shear Modulus	DIN 53294	MPa	13	19	29	50
	ASTM C 273	psi	1,885	2,755	4.205	7,250

Technical data of our products are typical values for the nominal density.

Materials

properties & rad. lenght

Rohacell

$$\frac{1}{X_0} = \sum_j \frac{w_j}{X_{0j}}$$

$$\begin{cases} w_j = weight \quad fraction \\ X_{0,j} = radiation \quad length \quad of \quad element \end{cases}$$

$$X_0 \cong 41.67 gcm^{-2} \qquad \rho = 3 \cdot 10^{-2} gcm^{-3}$$

$$L_0 \cong 1389 cm (\sim 5\% air)$$

$$1mm(Rohacell31) = 7 \cdot 10^{-5} X_0$$

Kapton

$$X_0 = 40.58 gcm^{-2}; \rho = 1.42 gcm^{-3}$$

$$12.5\mu m(Kapton) = 0.004375 X_0$$

$$25\mu m(Kapton) = 0.0087\% X_0$$

$$50\mu m(Kapton) = 0.0175\% X_0$$

Copper

$$X_{0,cu} = 12.86 gcm^{-2}; \rho = 8.96 gcm^{-3}$$

$$3\mu m(Copper) = 0.021\% X_0$$

$$18\mu m(Copper) = 0.126\% X_0$$

$$35\mu m(Copper) = 0.245\% X_0$$

CGEM-IT: Rad. Length

		% of X_0
CATHODE	Copper: 1*3 *1 Kapton: 2*12.5*1 Kapton 1*50*1 Rohacell: 2*1000*1 Epoxy: 2*10*1	0.021 0.0087 0.0175 0.014 0.0044 Total= 0.066
GEM foils	Copper: 6*3 *0.8 Kapton: 3*50 *0.8	0.1056 0.0420 Total= 0.1476
ANODE	Copper: 1*3 *1 Kapton: 2*50 *1 Kapton 1*12.5*1 Copper 1*3.5*0.87 Kapton 1*50*0.2 Copper 1*3.5*0.2 Epoxy: 2*10 *1 Rohacell 2*1000*1	0.021 0.035 0.004375 0.021 0.0035 0.0049 0.0032 0.028 Total=0.12
		1 Layer: 0 .33 3 layers: ≈1

Cathode deformation test:

Axial Compression

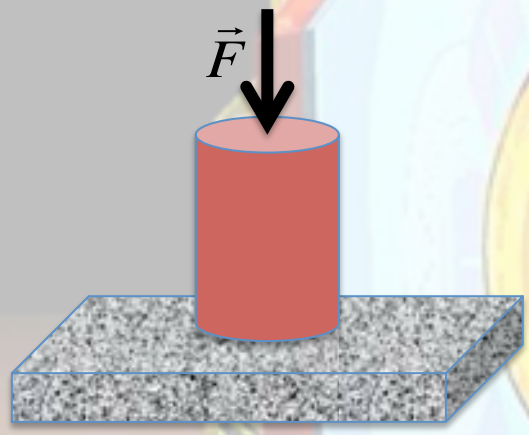

4 samples tested: B,C,D,E
Same structure as for the cathode
Dimensions: L=35 cm; Φ=8cm

Instron mod. 4467
Strain gauge Instron 500 N

Cathode deformation test:
axial compression

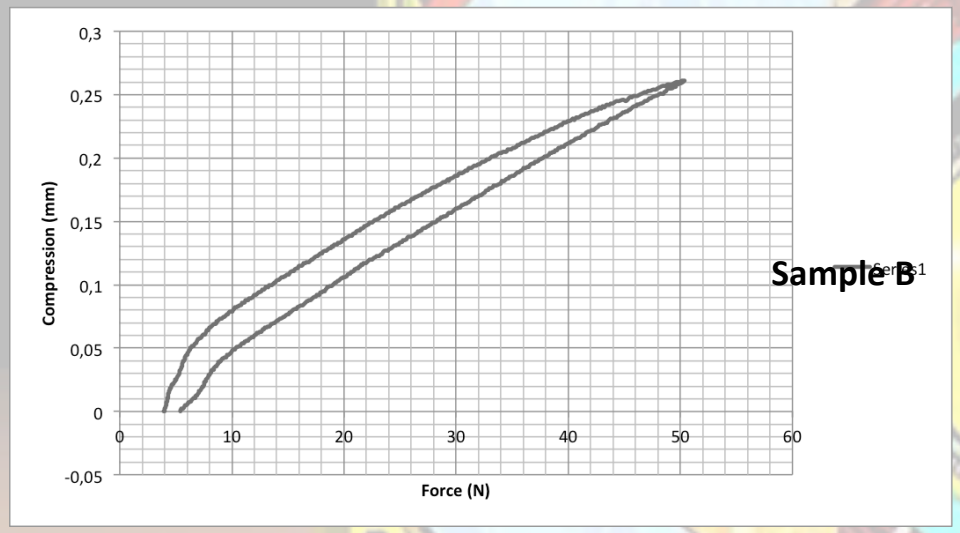

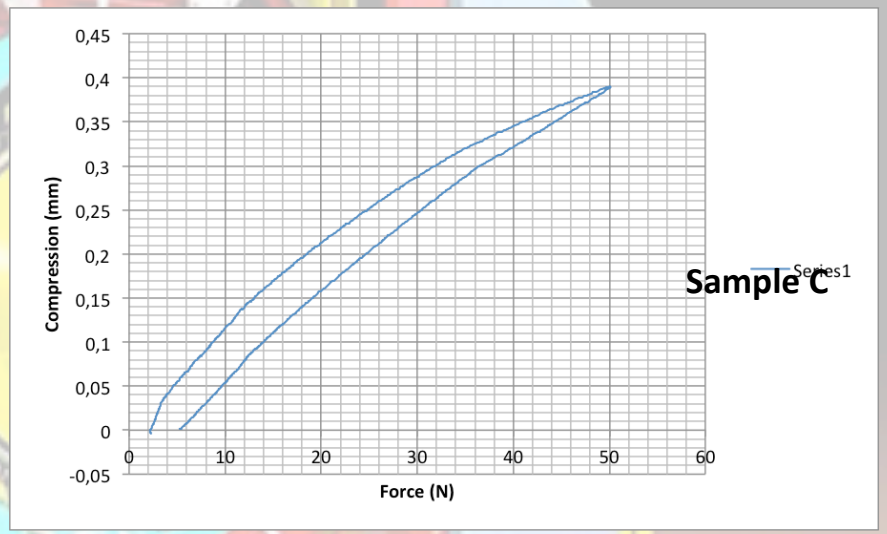

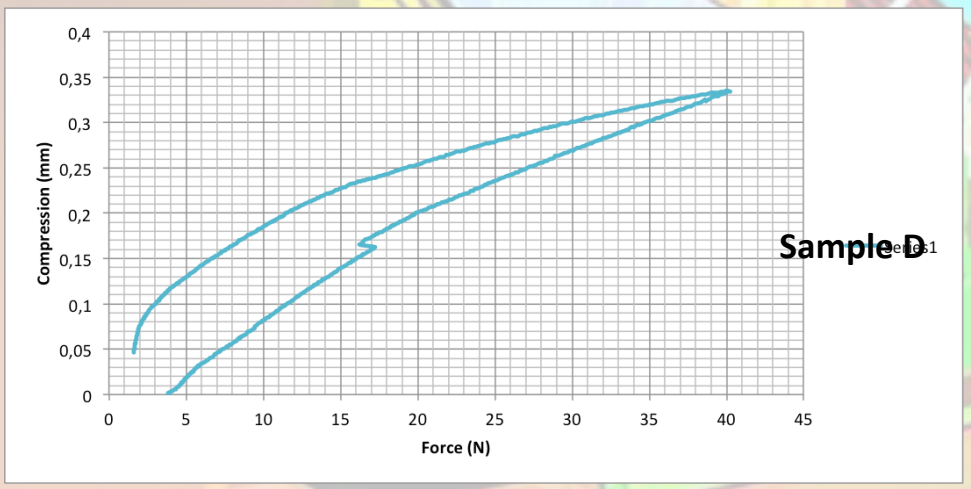

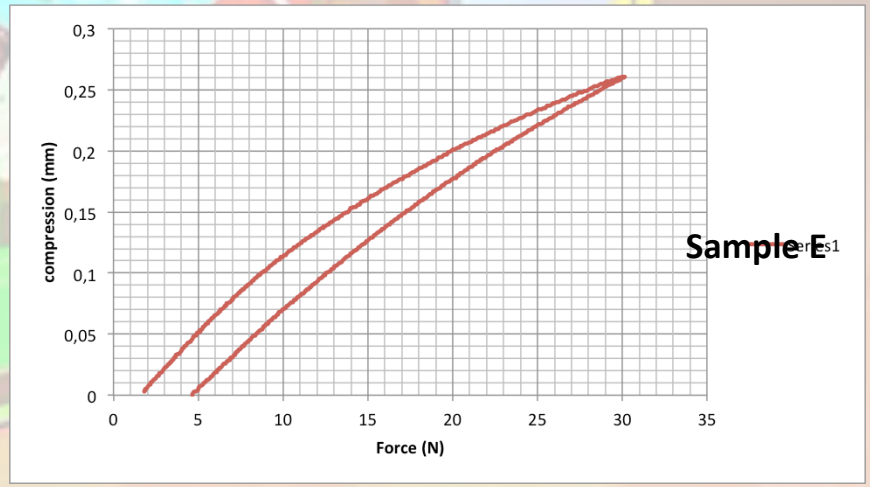

Cathode deformation test:

internal pressure

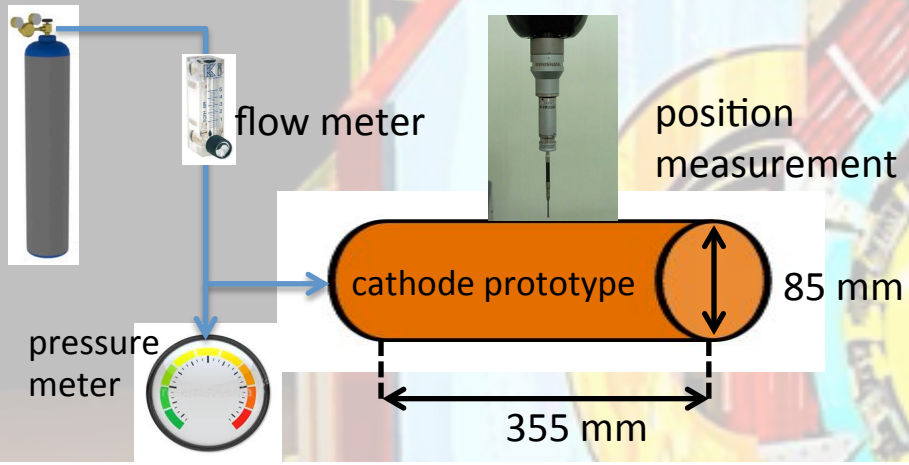

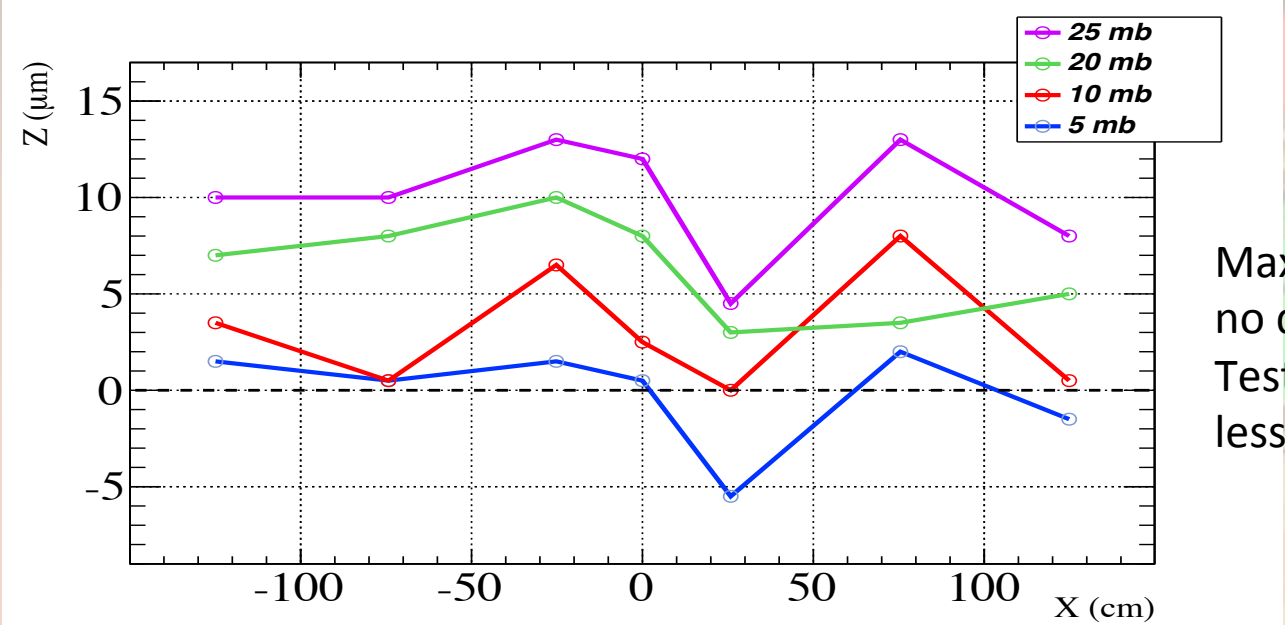

Max working pressure ~5 mbar:
no deformation.
Tested up to 25 mbar:
less than 15 µm displacement.

Radiation Test of samples

Source:

Co^{60} Calliope Source @ ENEA La Casaccia Roma

- Radiation: Gamma Source
- Energy: ≈1.25 MeV
- Max Activity : 3.7 10^{15} Bq
- Actual activity: 0.34 10^{15} Bq

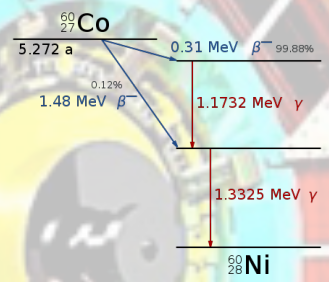

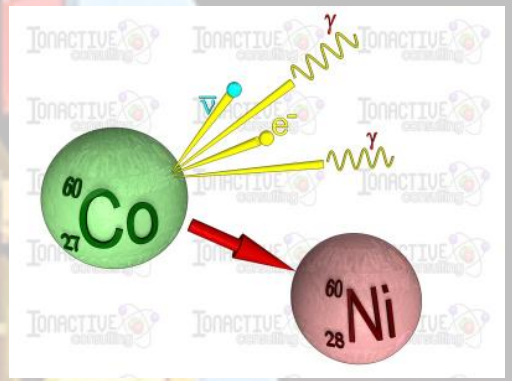

sample	Init. Dose (Gy/h)	fin. Dose (Gy/h)	irrad. Time (h)	Absorbed dose (kGy)
B	400.5	400.5	256	103
C	400.5	400.5	47	19
D	40.6	40.6	438	18
E	400.5	400.5	14	5.7

Cathode deformation test:

axial compression after irradiation

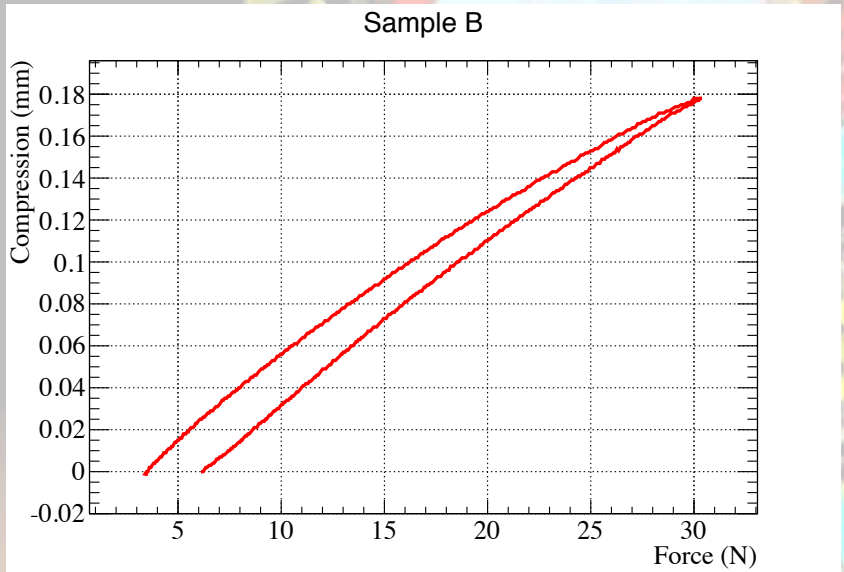

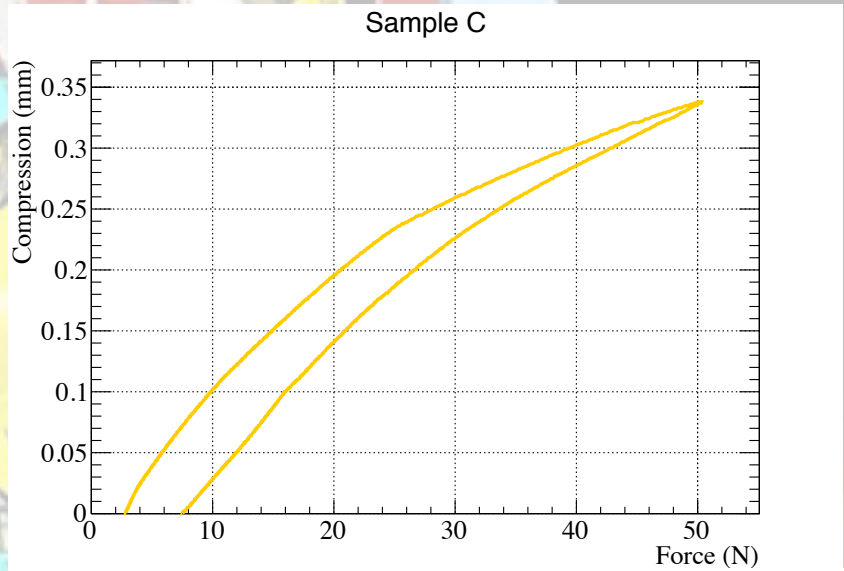

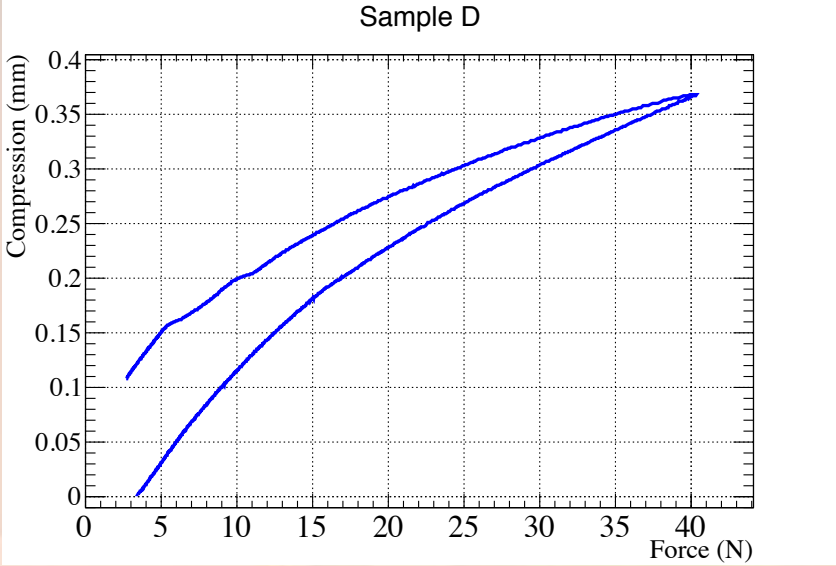

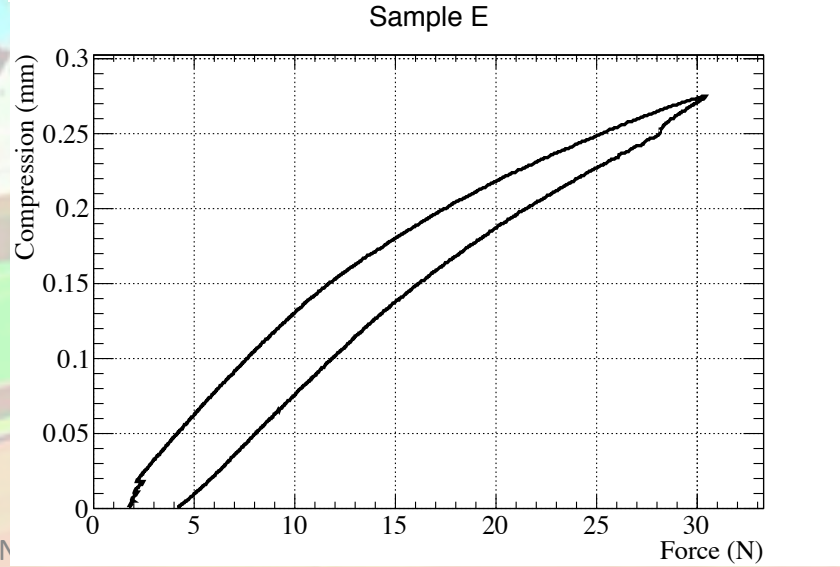

Cathode deformation test:

Internal pressure after irradiation

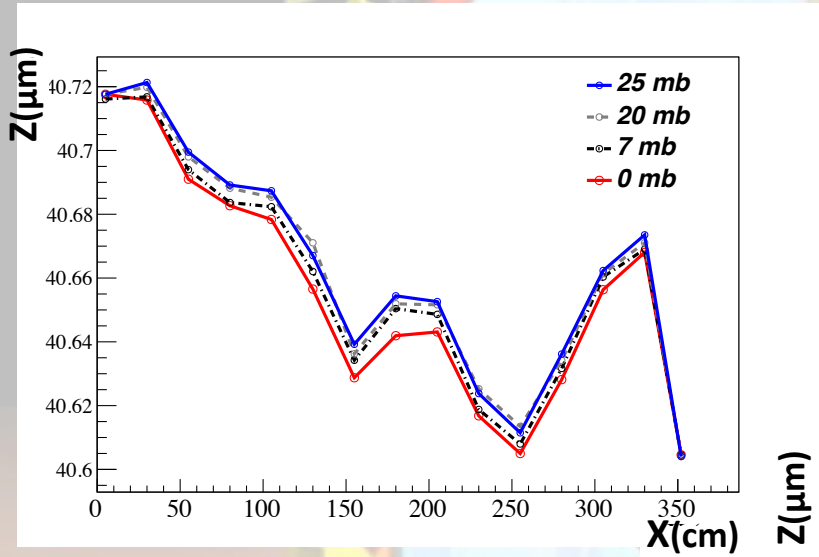

No visible effect on sample B
up to the highest test pressures

Geometry (gain) is very stable

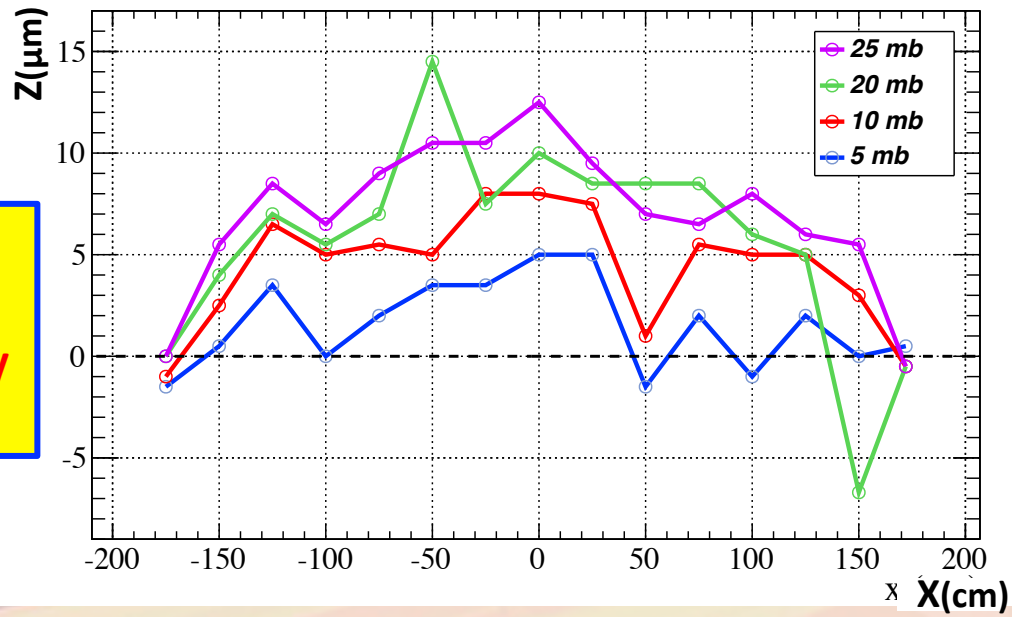

- **the sandwich structure will not affect the charge collection**
- **Charge collection it is not affected by the atmospheric pressure variations**

CGEM-IT

the layer sructure

Structure of a Layer

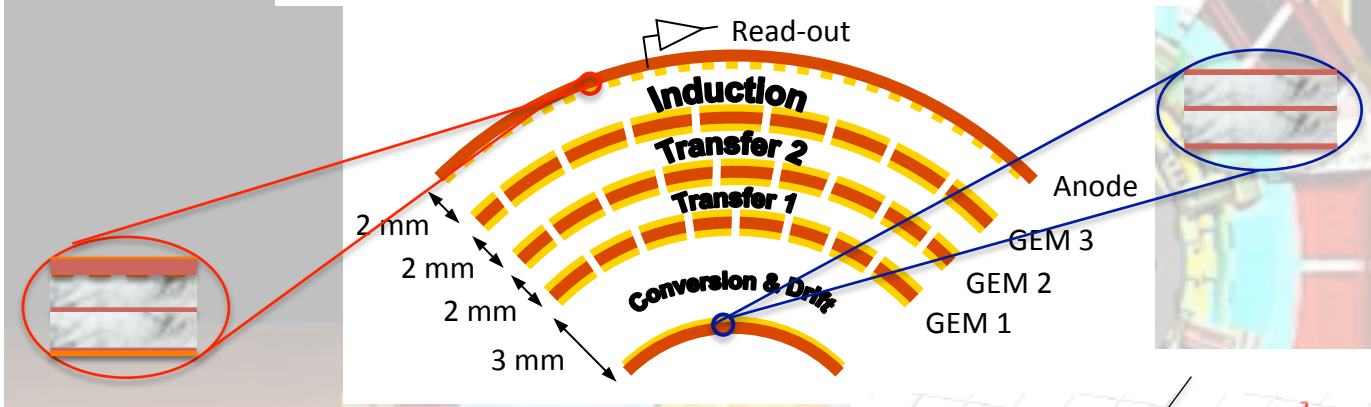

Anode PCB

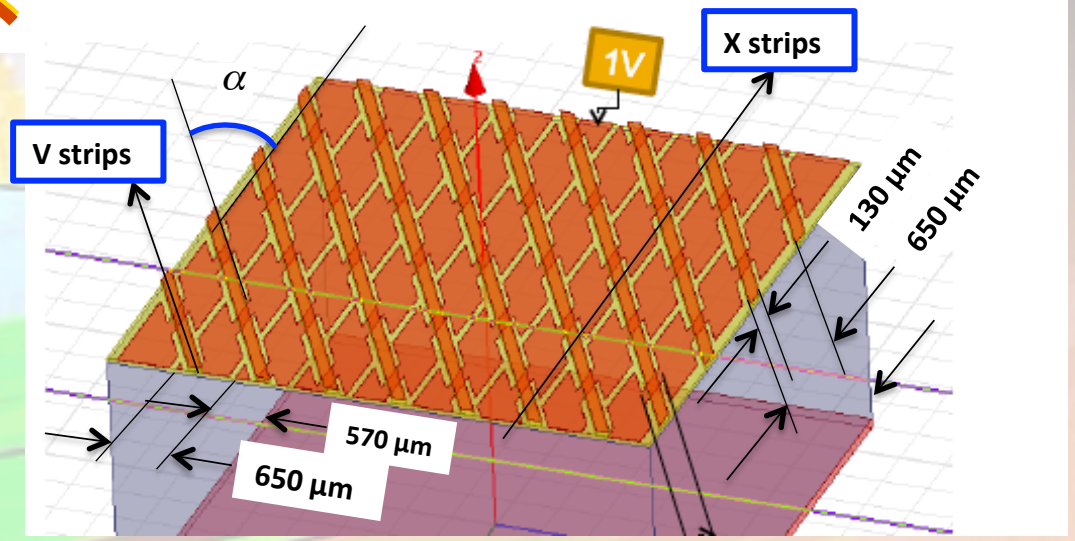

	Layer1	Layer 2	Layer 3
# ch. x	846	1281	1692
# ch. stereo	1176	2193	2838
Stereo angle	45,9	33.1	33.0

Tot. n. of channels: 10026

$X \| \vec{B} \qquad Y \perp \vec{B}$

GEM foils:

10 micro-sectors
10 settori
10 settori
10 settori
10 settori
1 macro-sector

GEM:
assembly & test

GEM foils arrived from CERN and have been tested in the clean room.

GEM production quality test.
Before gluing, a HV test is performed on the GEM foils.
Good GEM must satisfy both:

- <1 nA @ 600 V (R> 600 GΩ)
- <2 discharges/30mins

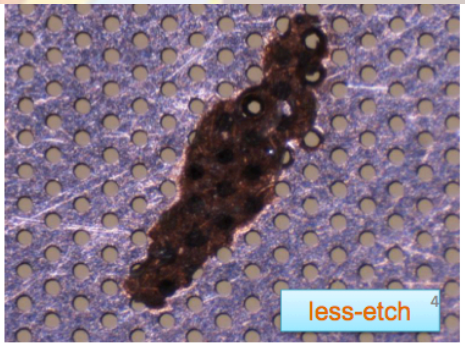

CGEM-it:
GEM 1 assembly

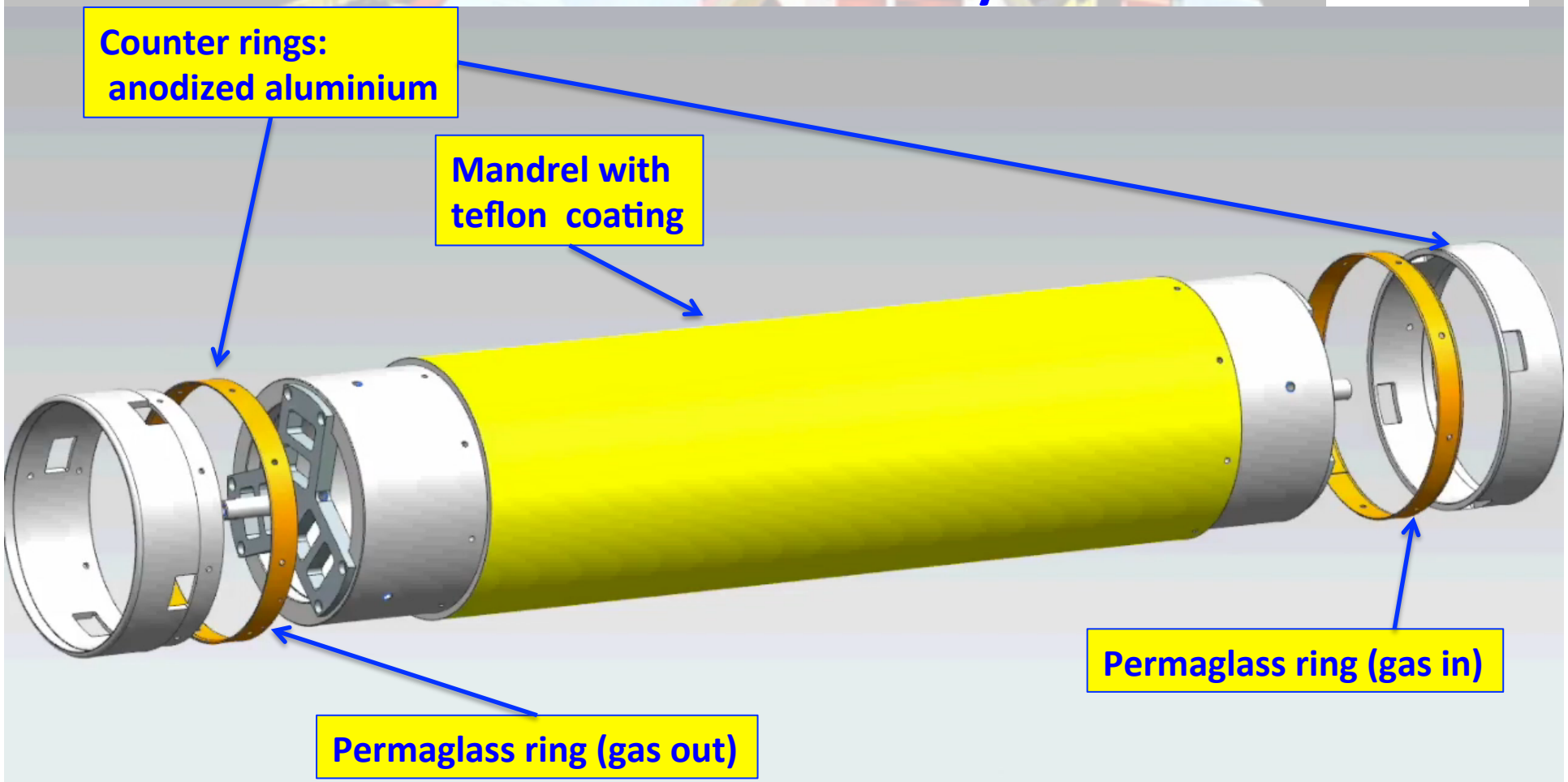

CGEM-it:
GEM 1 assembly

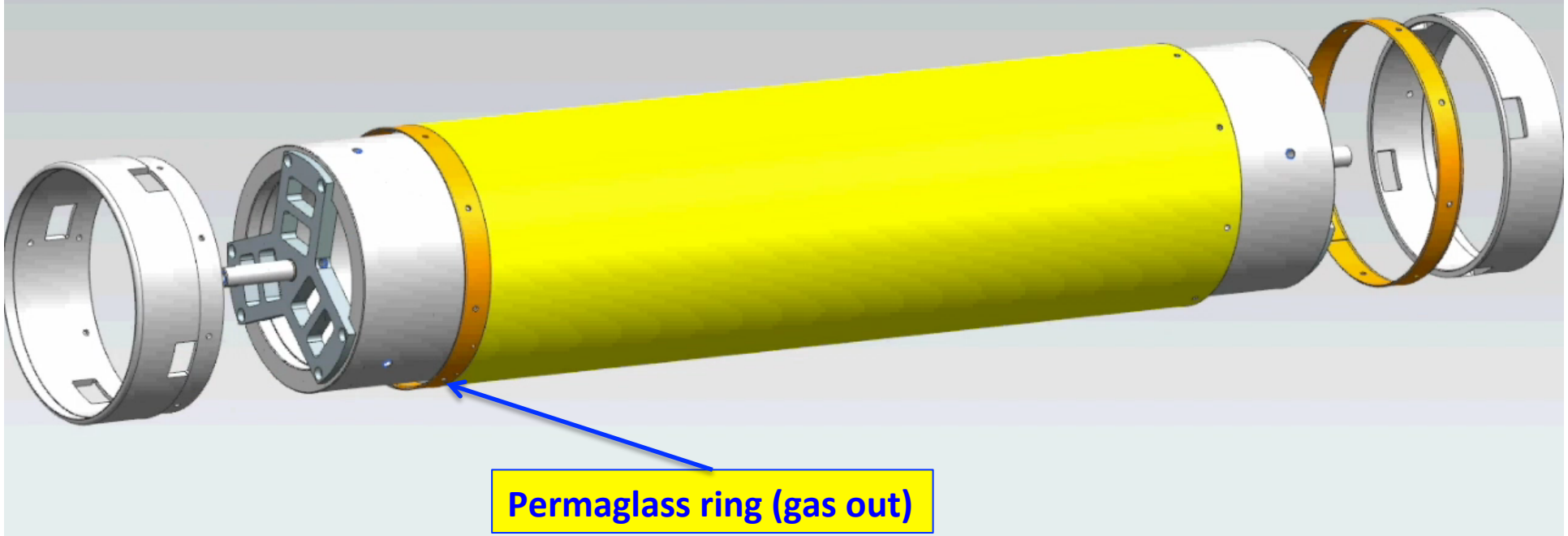

CGEM-it:
GEM 1 assembly

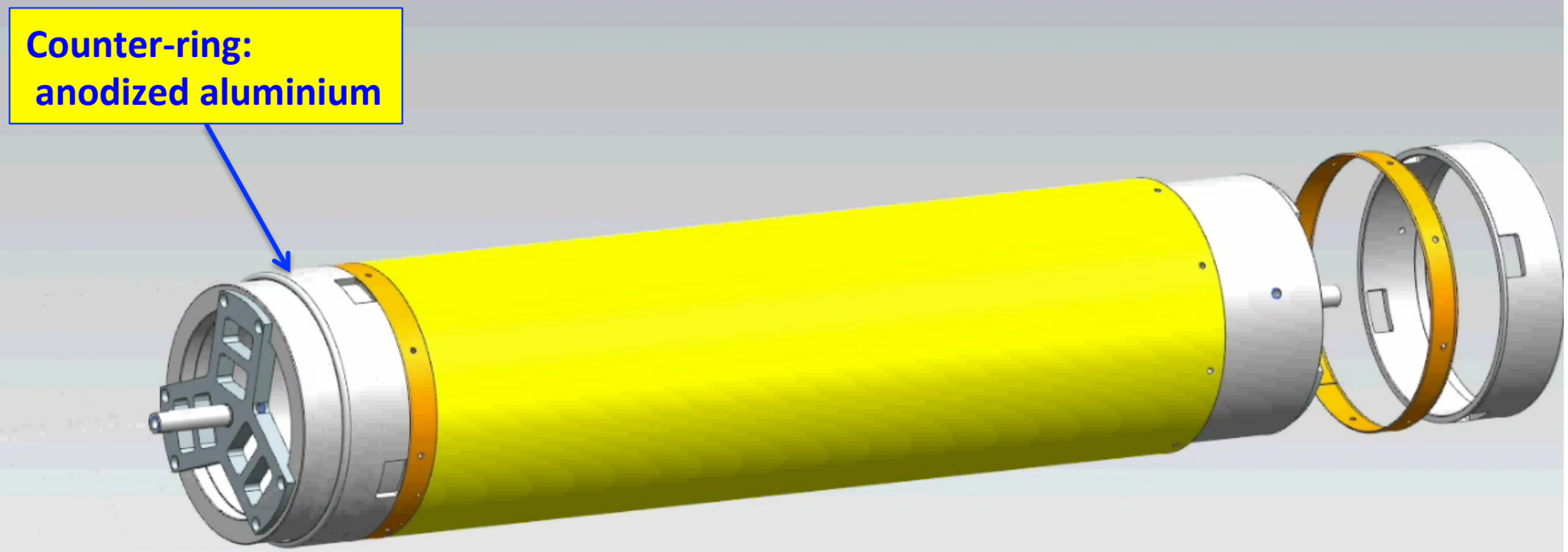

CGEM-it:
GEM 1 assembly

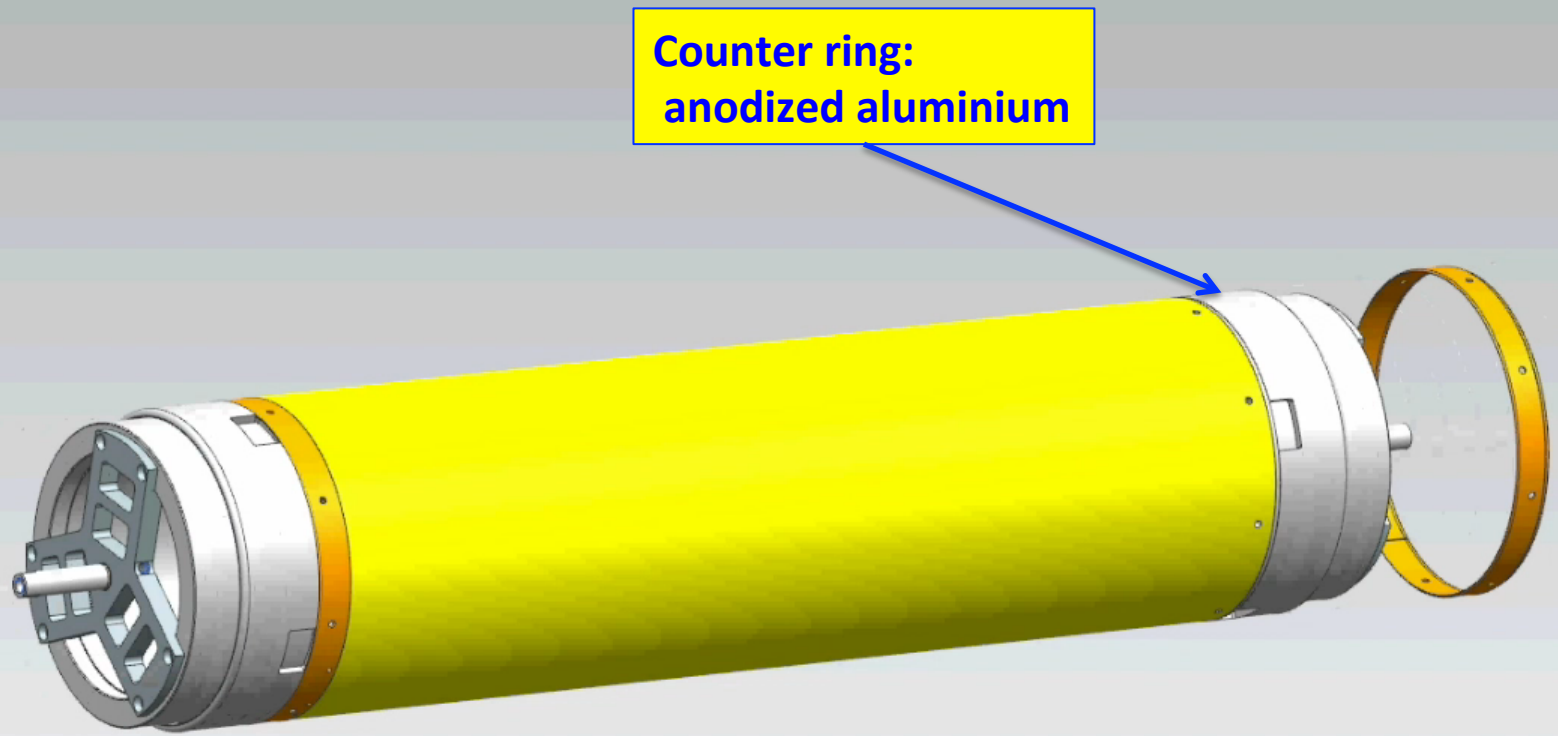

CGEM-it:
GEM 1 assembly

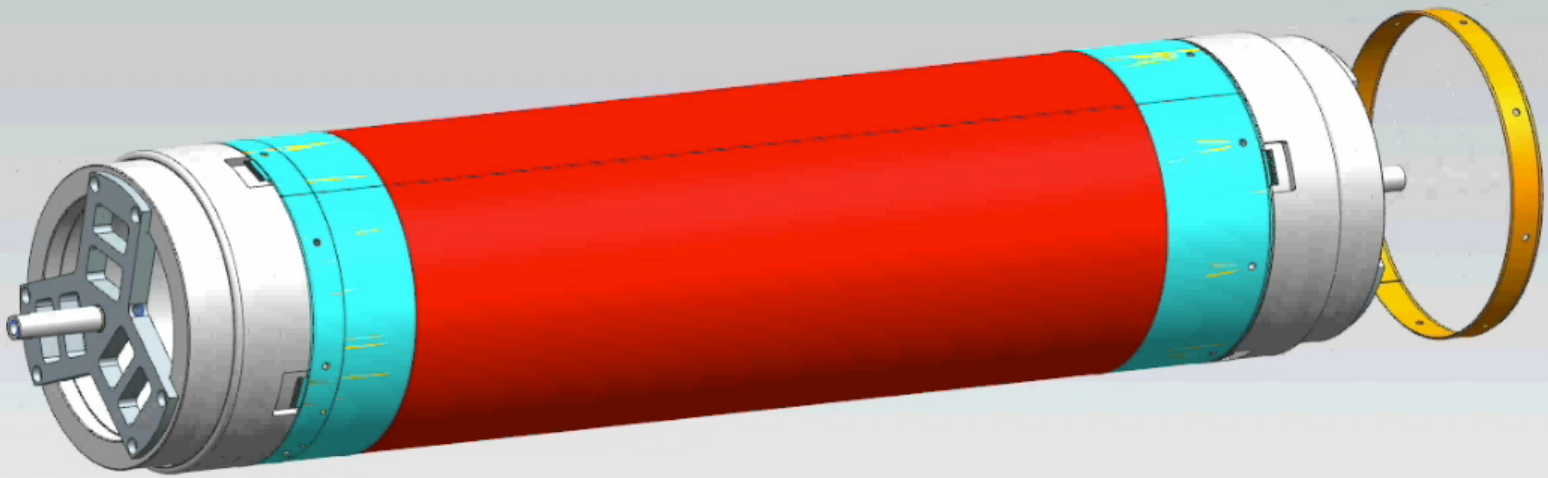

GEM:
Gluing under vacuum

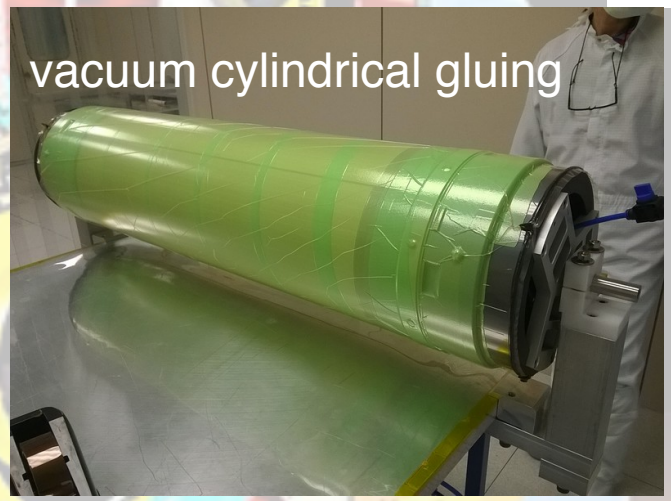

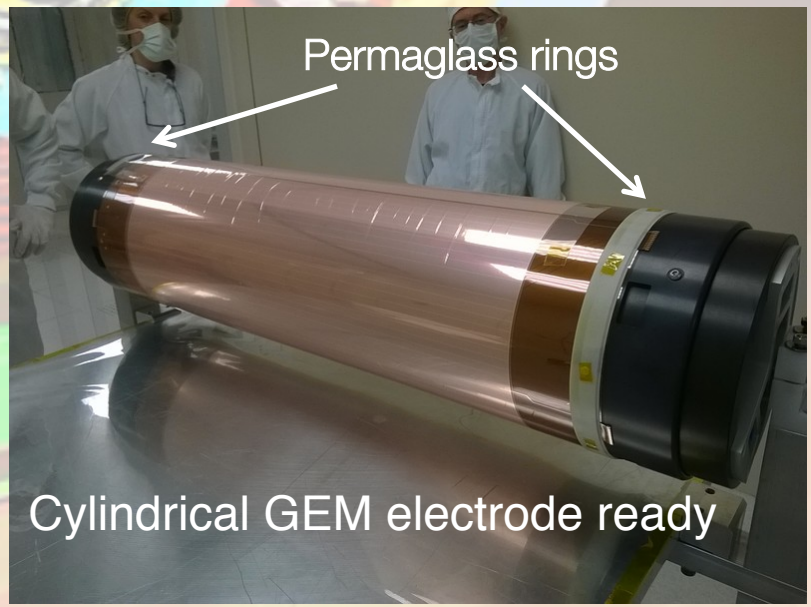

- Pictures of GEM cylindrical assembly in the INFN-LNF clean room
- Plan to move to the vertical assembly soon .

Cathode :
Assembly procedure

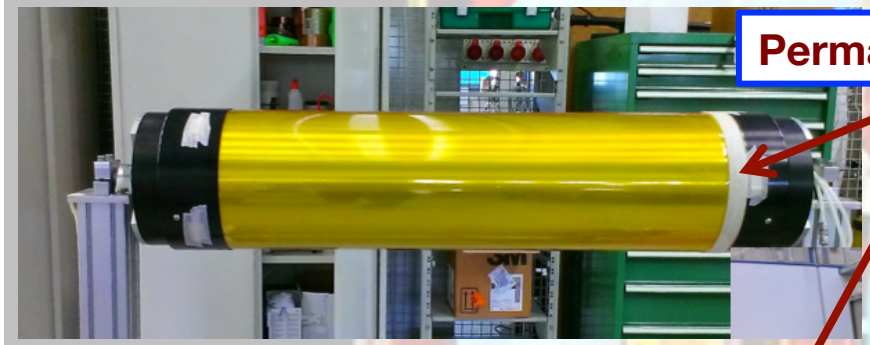

Permaglass ring

- 12.5 micron kapton foil around the aluminum mold; that is a critical part.

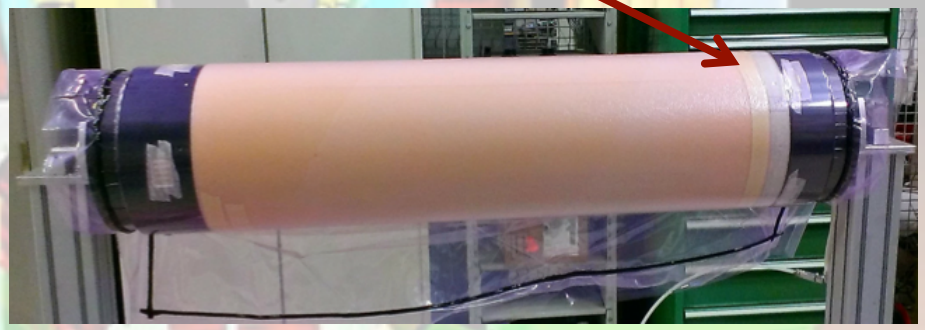

- A 2mm thick Rohacell sheet is glued under vacuum (~0.1 mbar) on the kapton.

- the Rohacell plane is machined with a precision Lathe and grindstone to 1mm.

CGEM-IT:

C, G1,G2,G3 ready for assembling

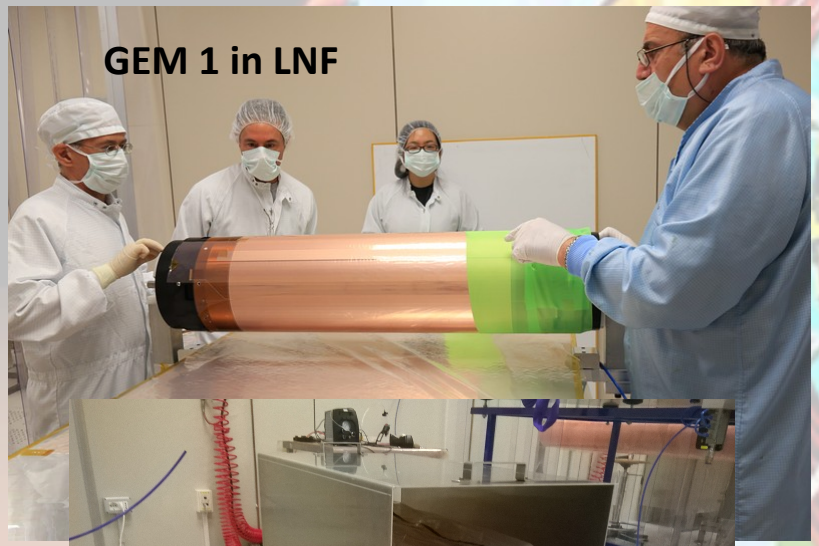

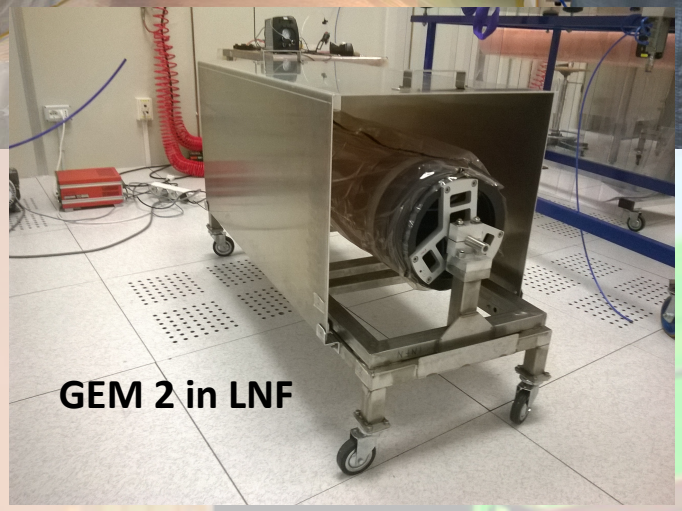

Layer 2:
Anode PCB

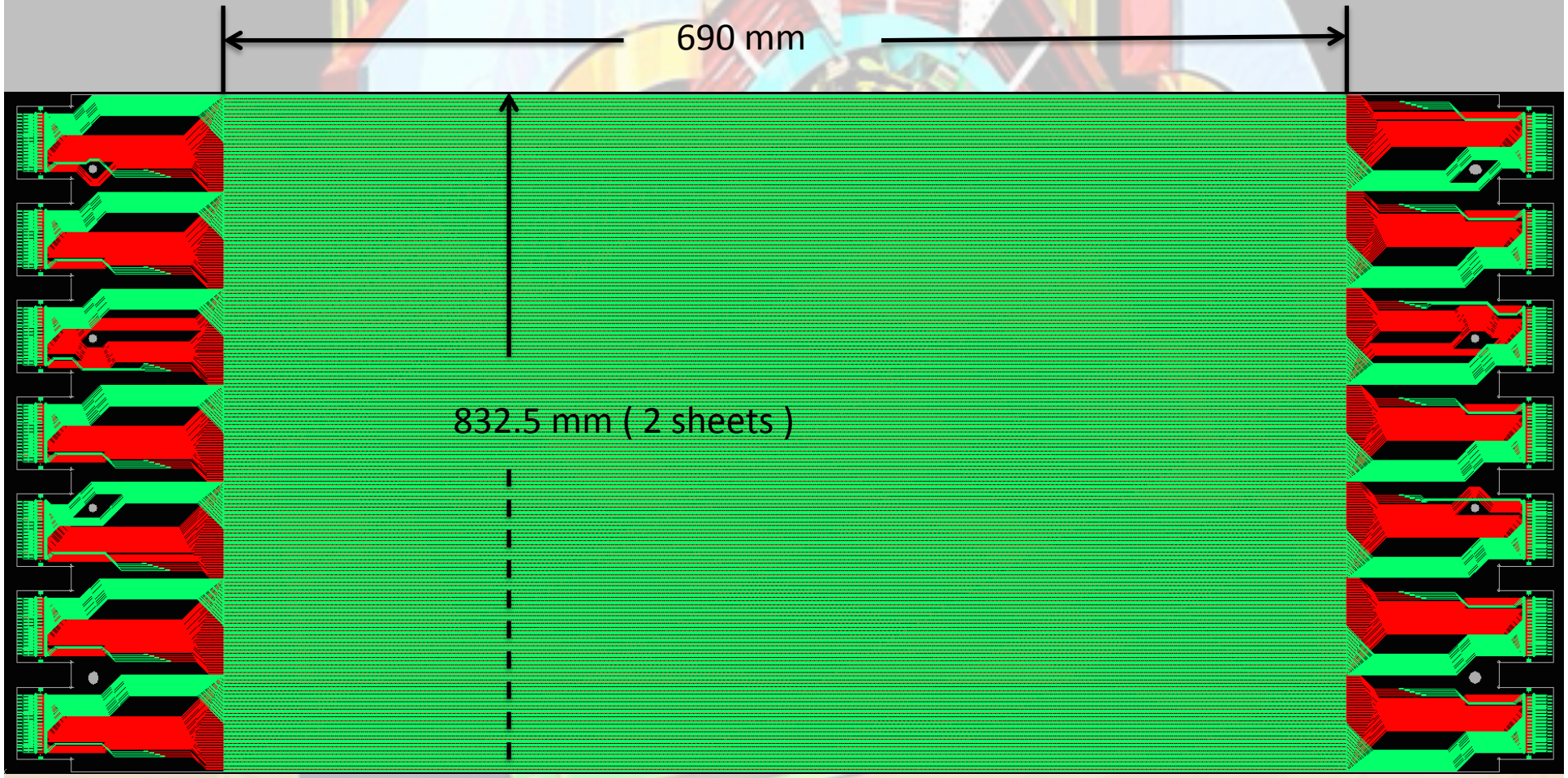

Layer 2:
Anode PCB

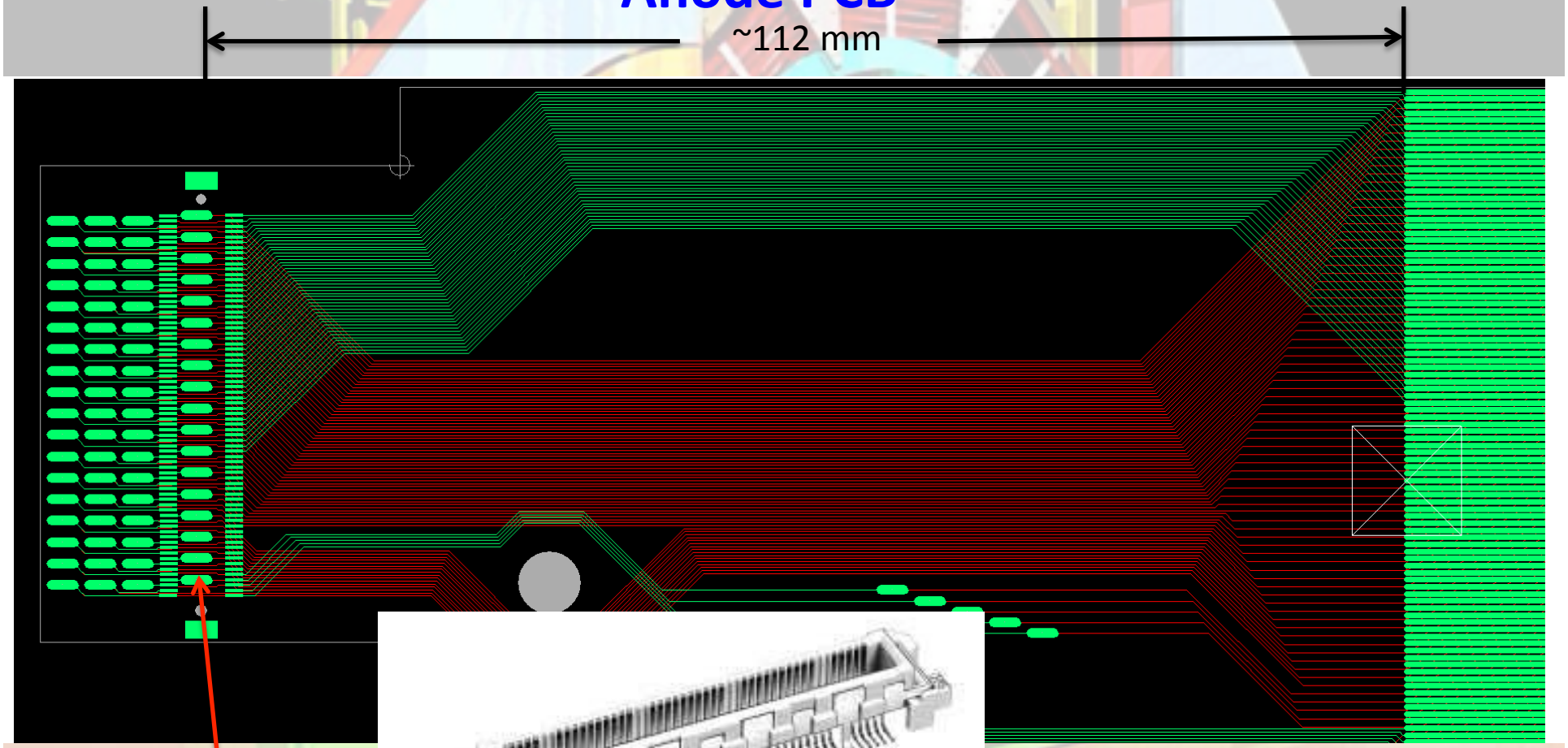

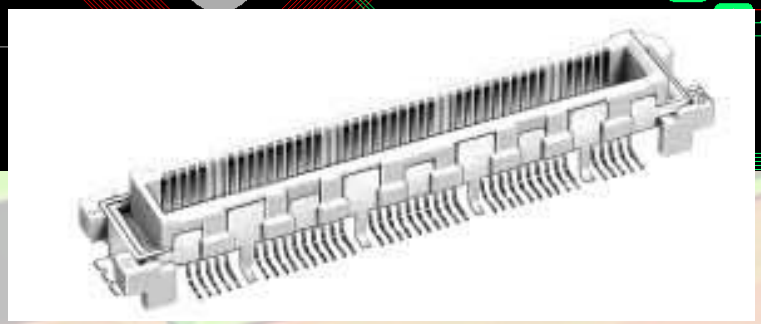

Hirose Conn.
Fx 10A 144p

CGEM-it:
Anode assembly

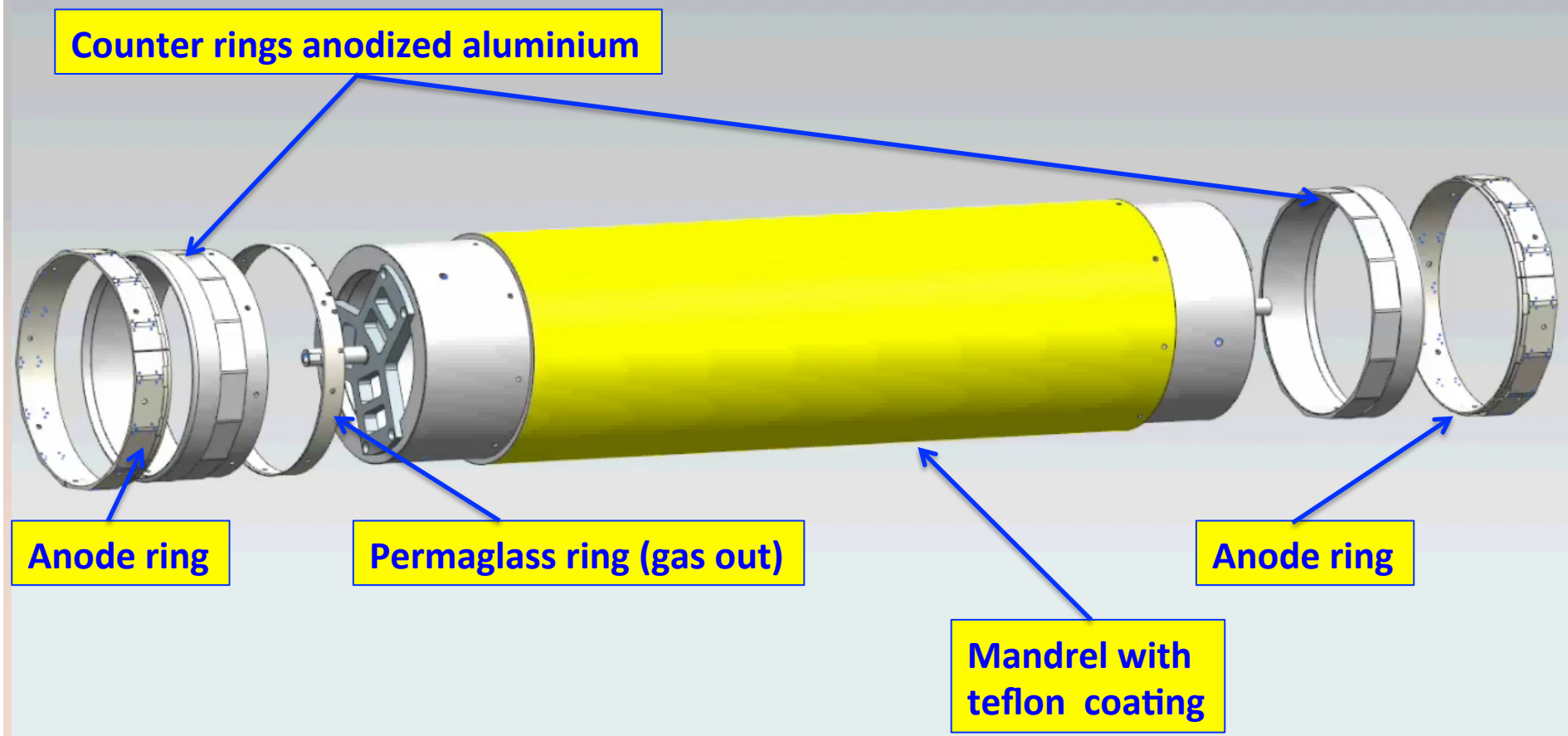

CGEM-it:
Anode assembly

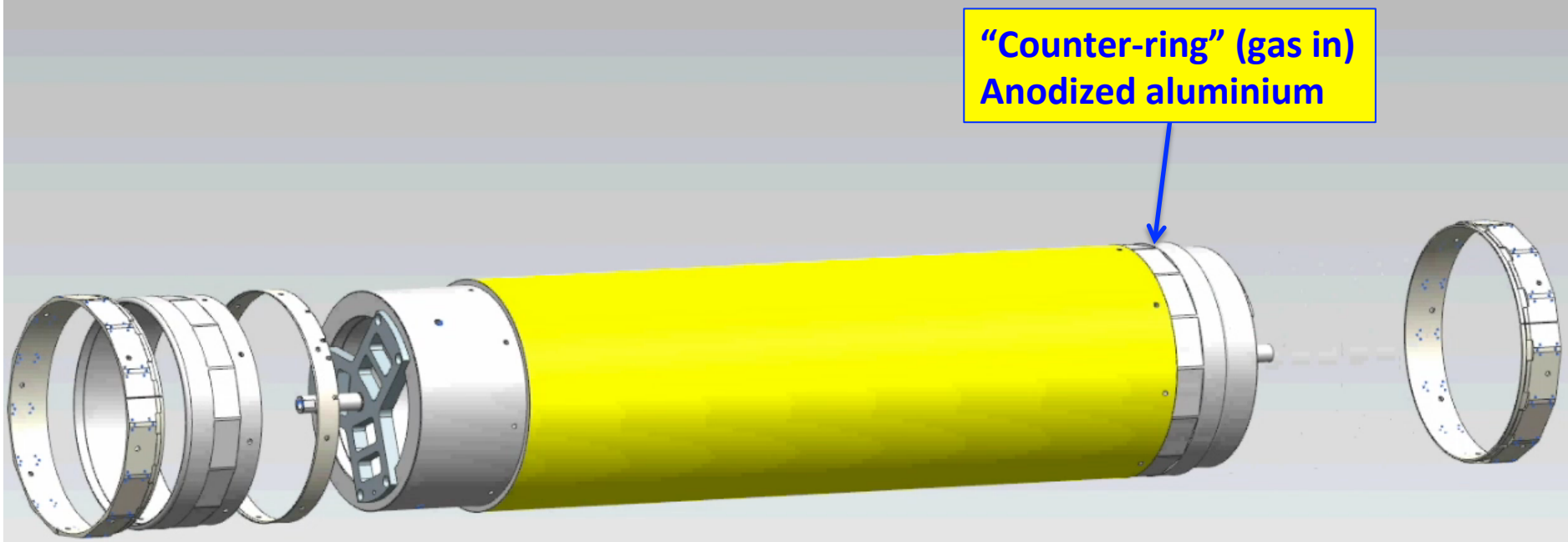

CGEM-it:
Anode assembly

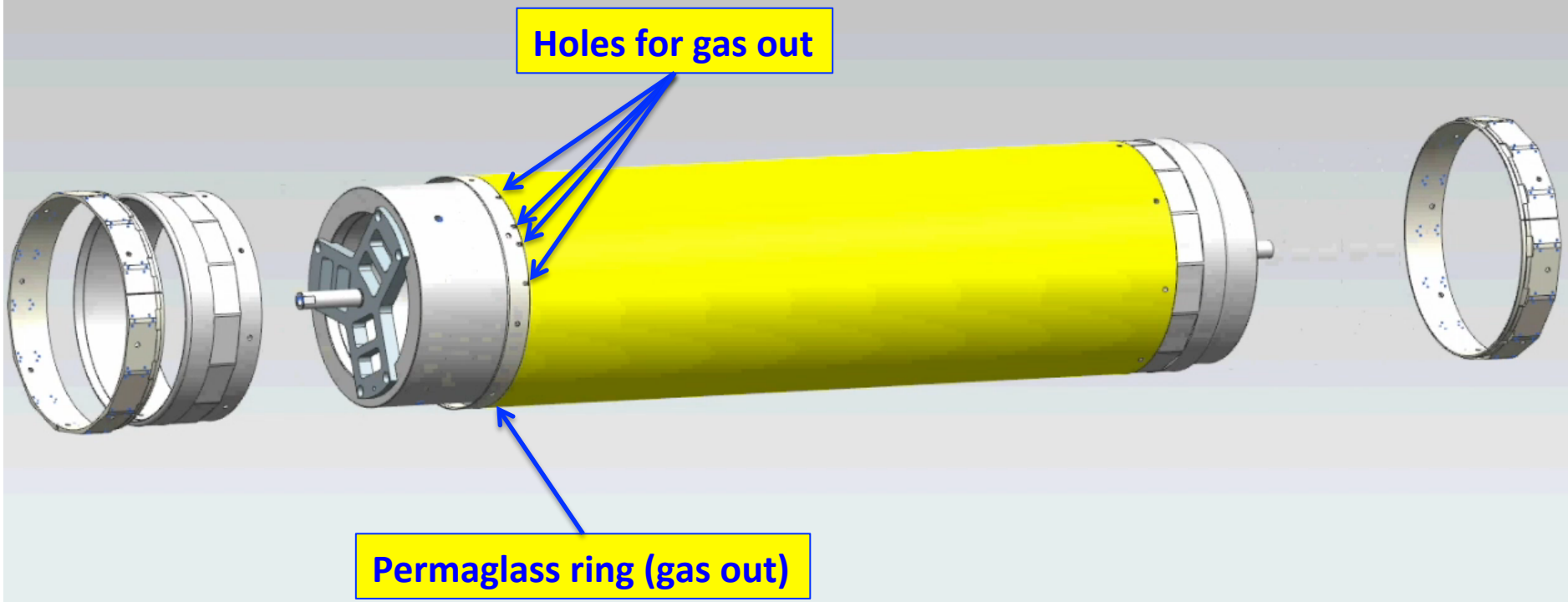

CGEM-it:
Anode assembly

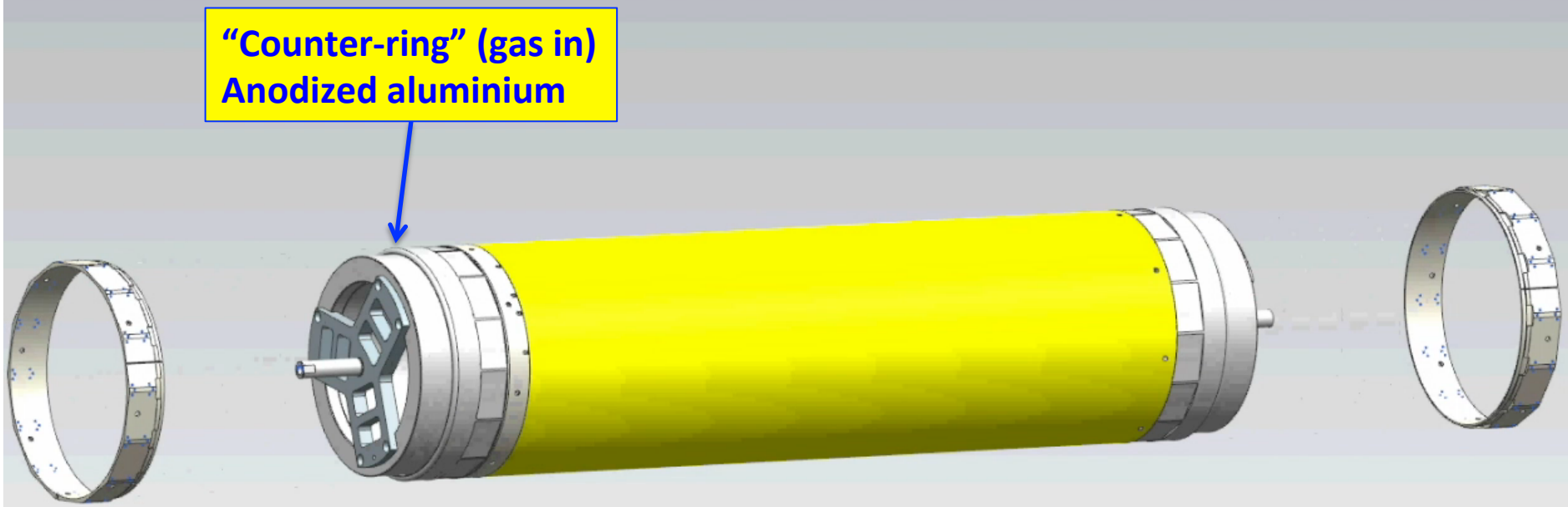

CGEM-it:
Anode assembly

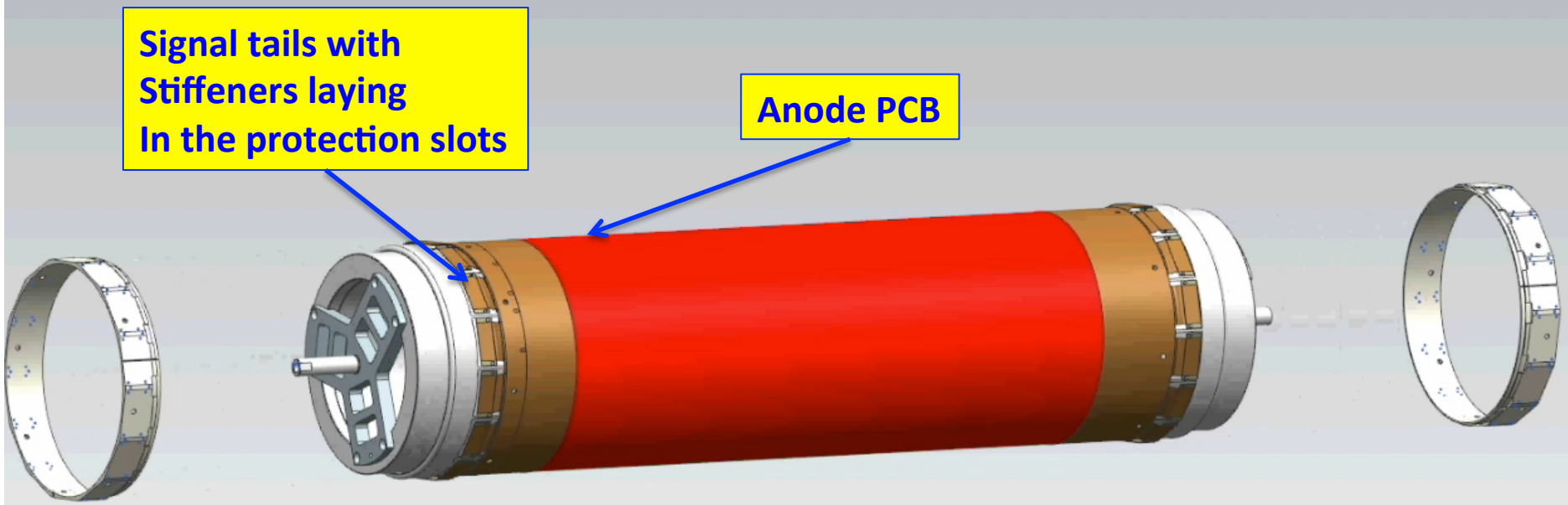

CGEM-it:
Anode assembly

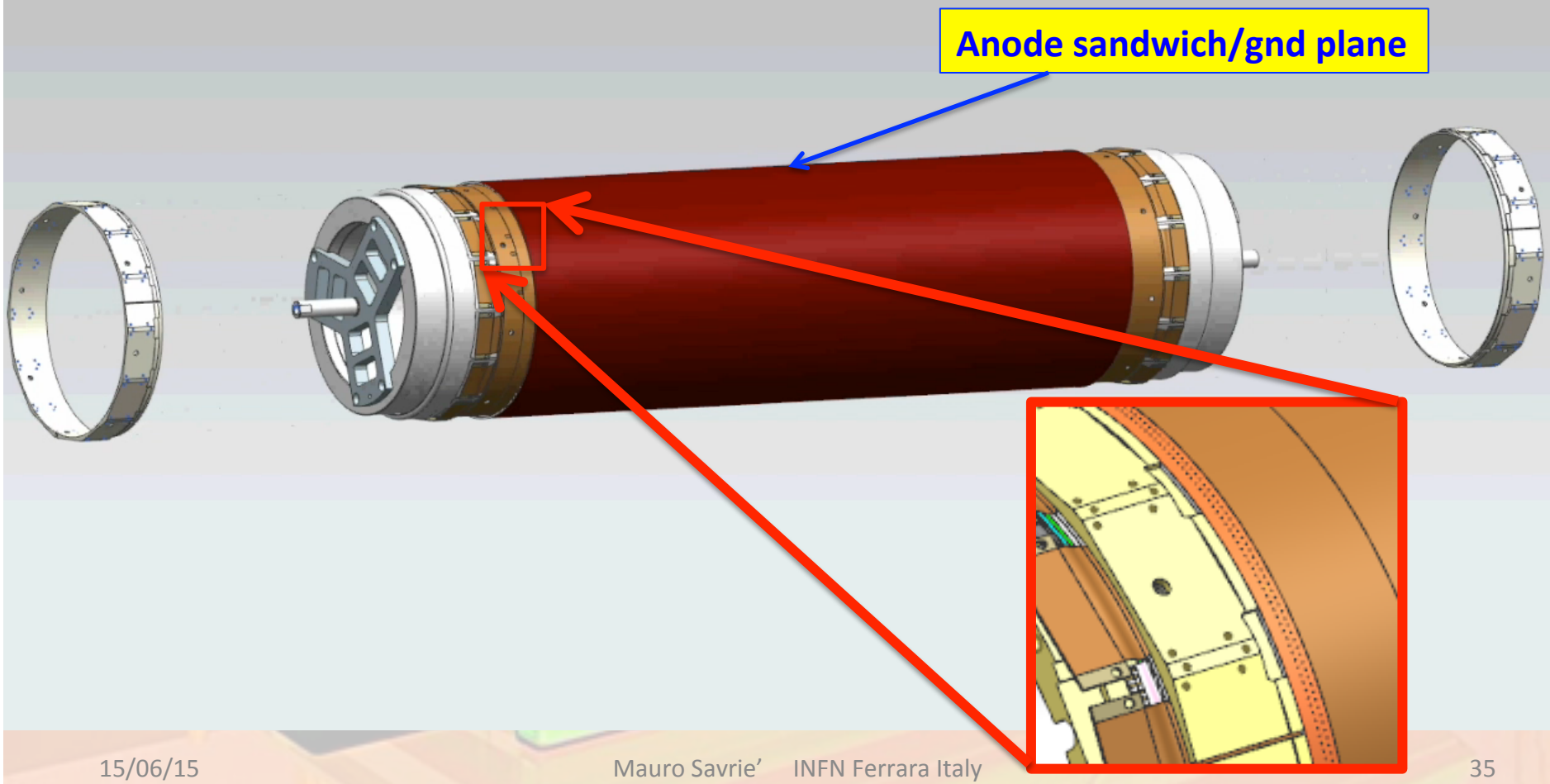

CGEM-it:
Anode assembly

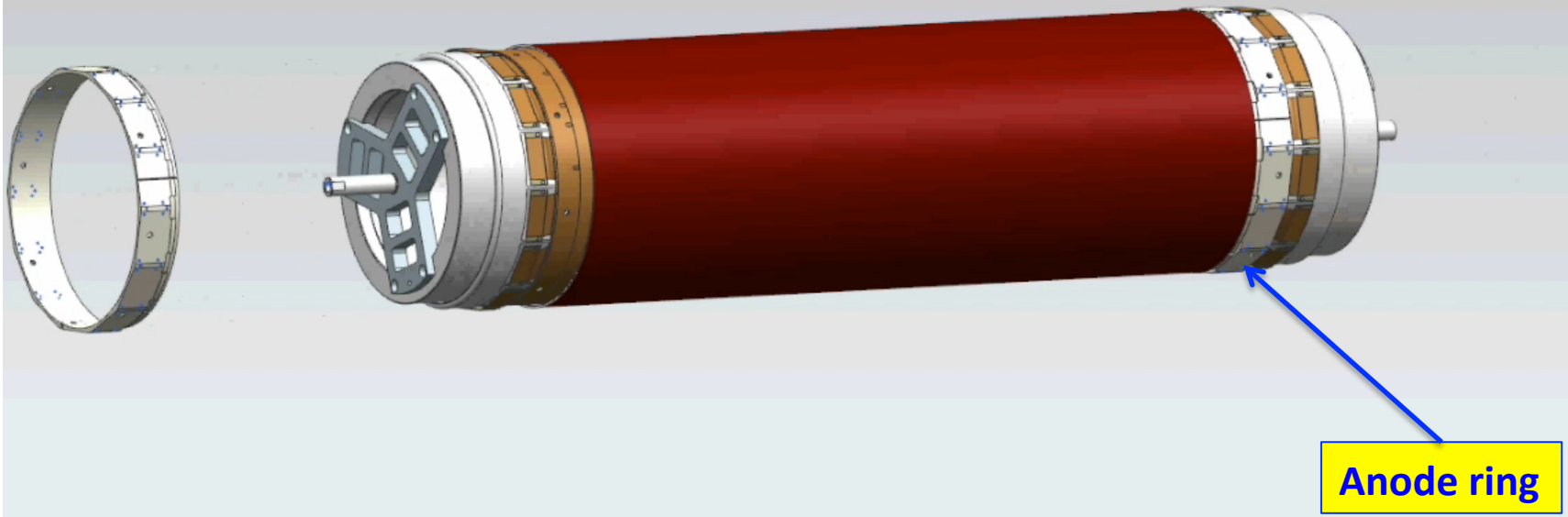

CGEM-IT:
assembling all pieces

The "Clessidra"

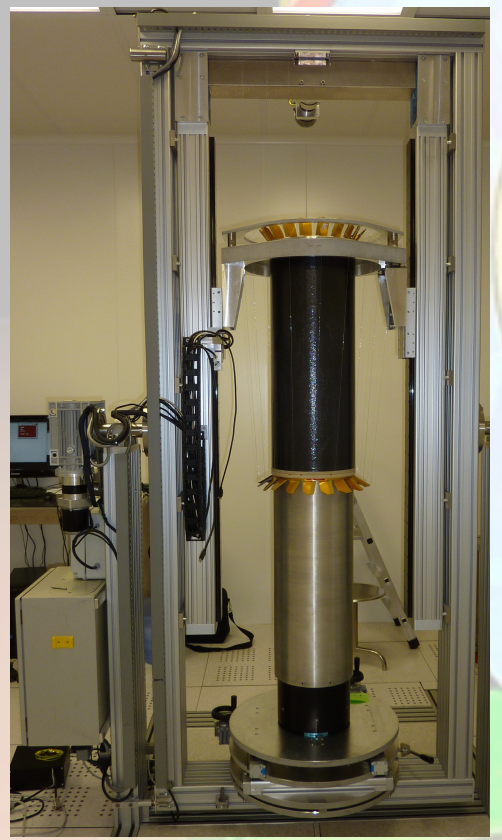

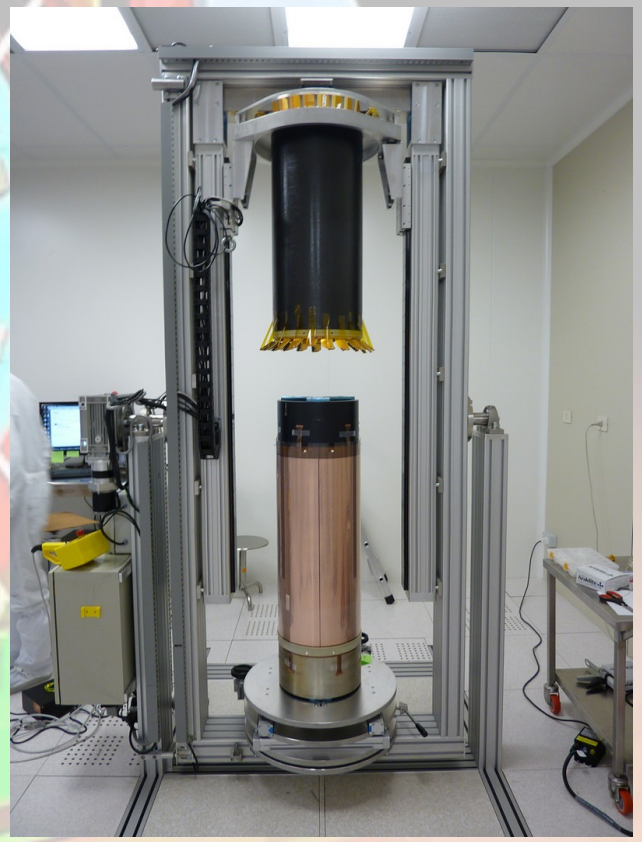

CGEM-IT:
Layer 2

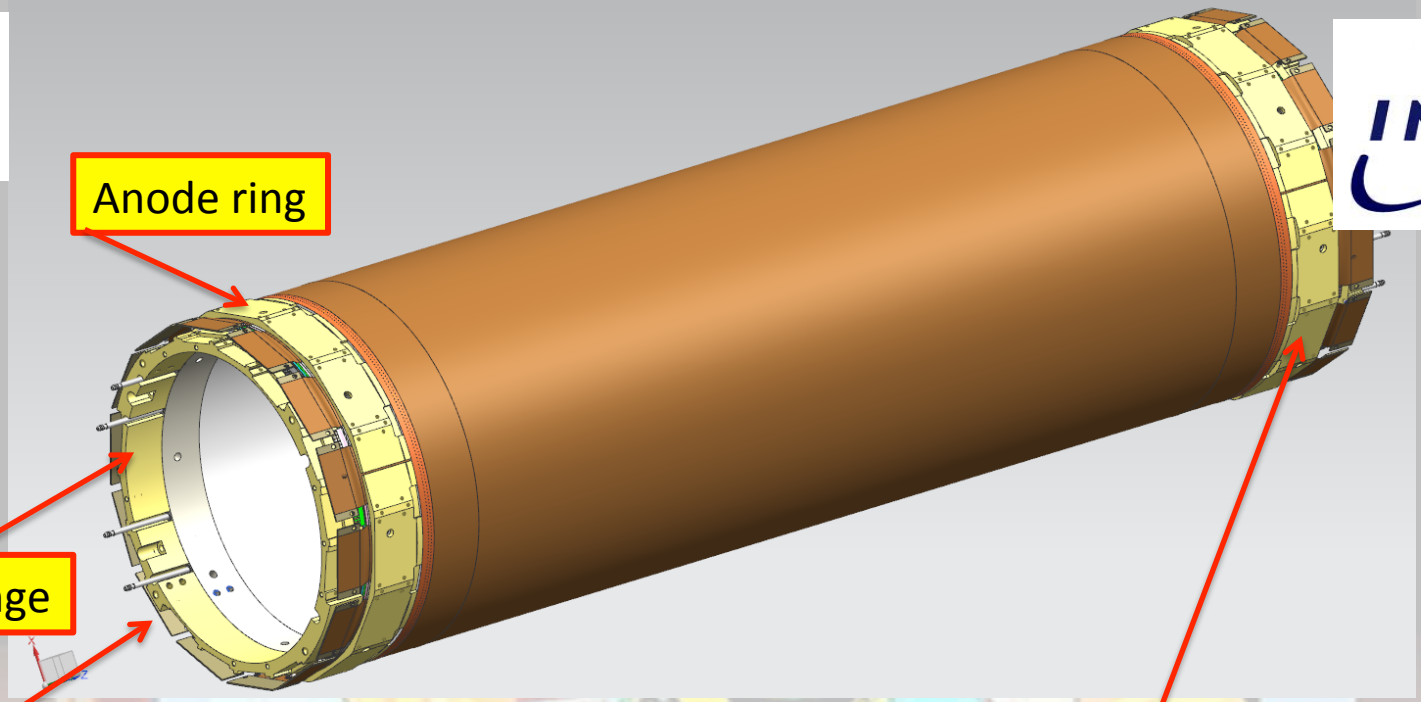

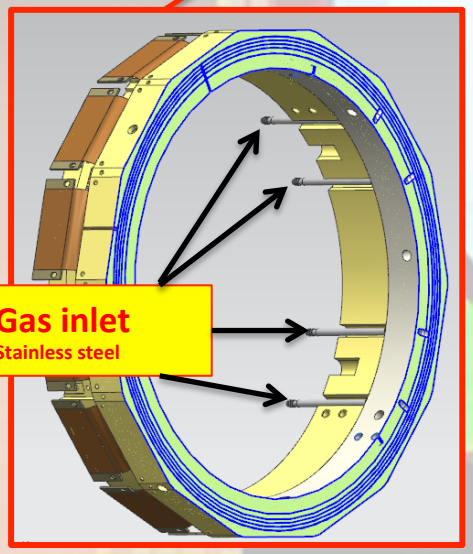

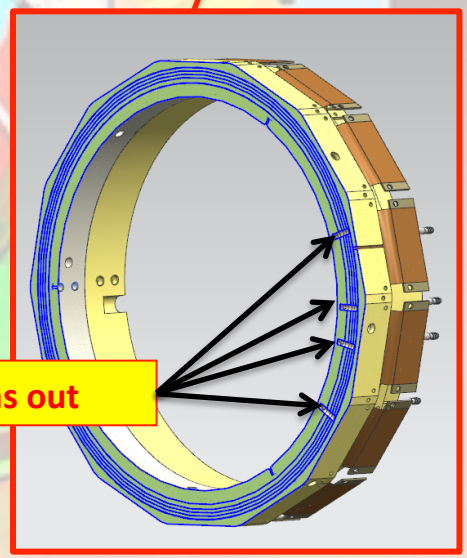

Layer 2:
HV connections

Gas In side:
- 12 GEM HV
- 2 Cathode HV

Gas Out side:
- 12 GEM HV
- no Cathode HV

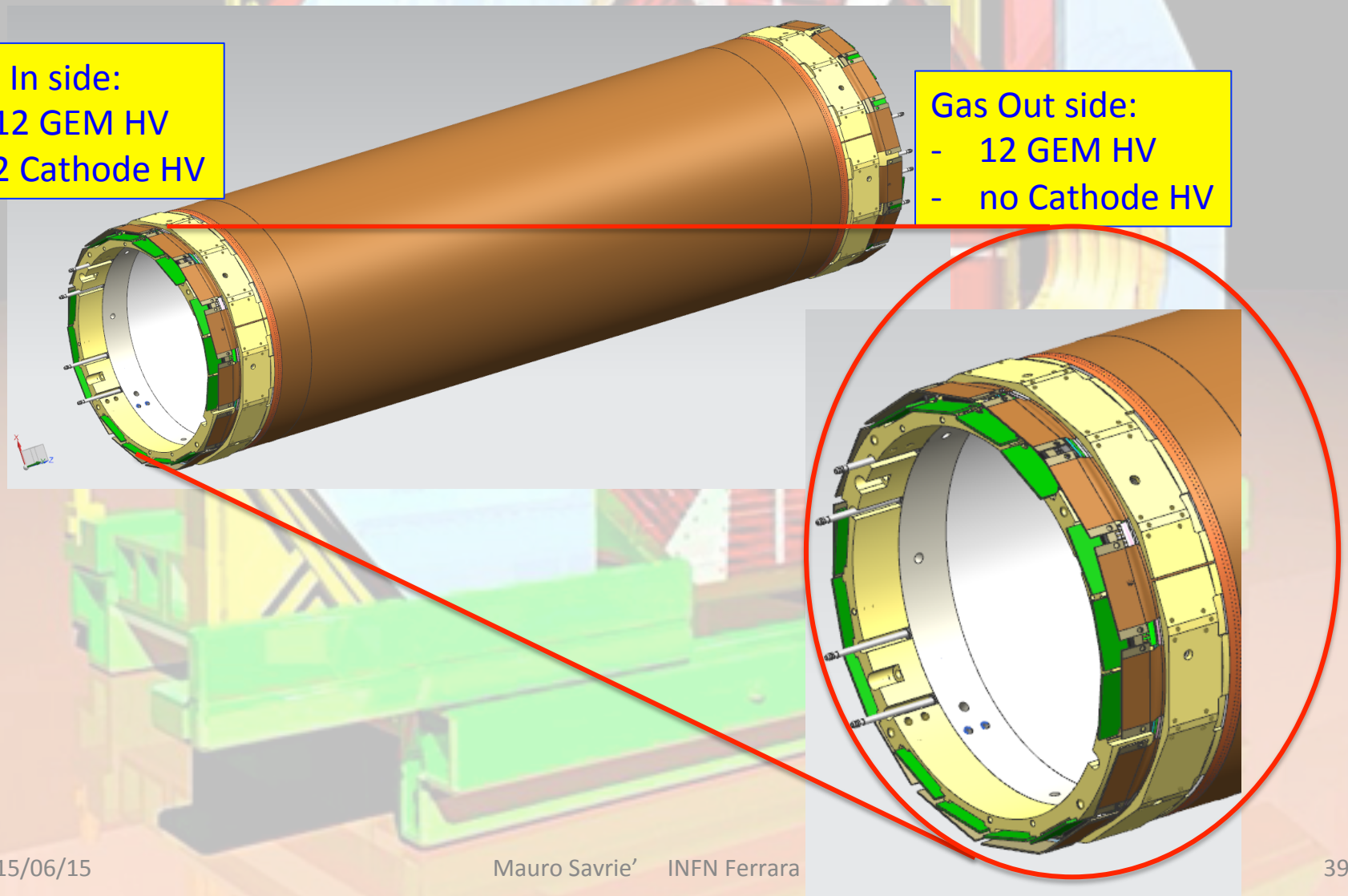

Layer 2:
signal cards

Gas In side:
- 14 transition board
- 14 Asic PCB cards

Gas out side:
- 14 transition board
- 14 ASIC PCB cards

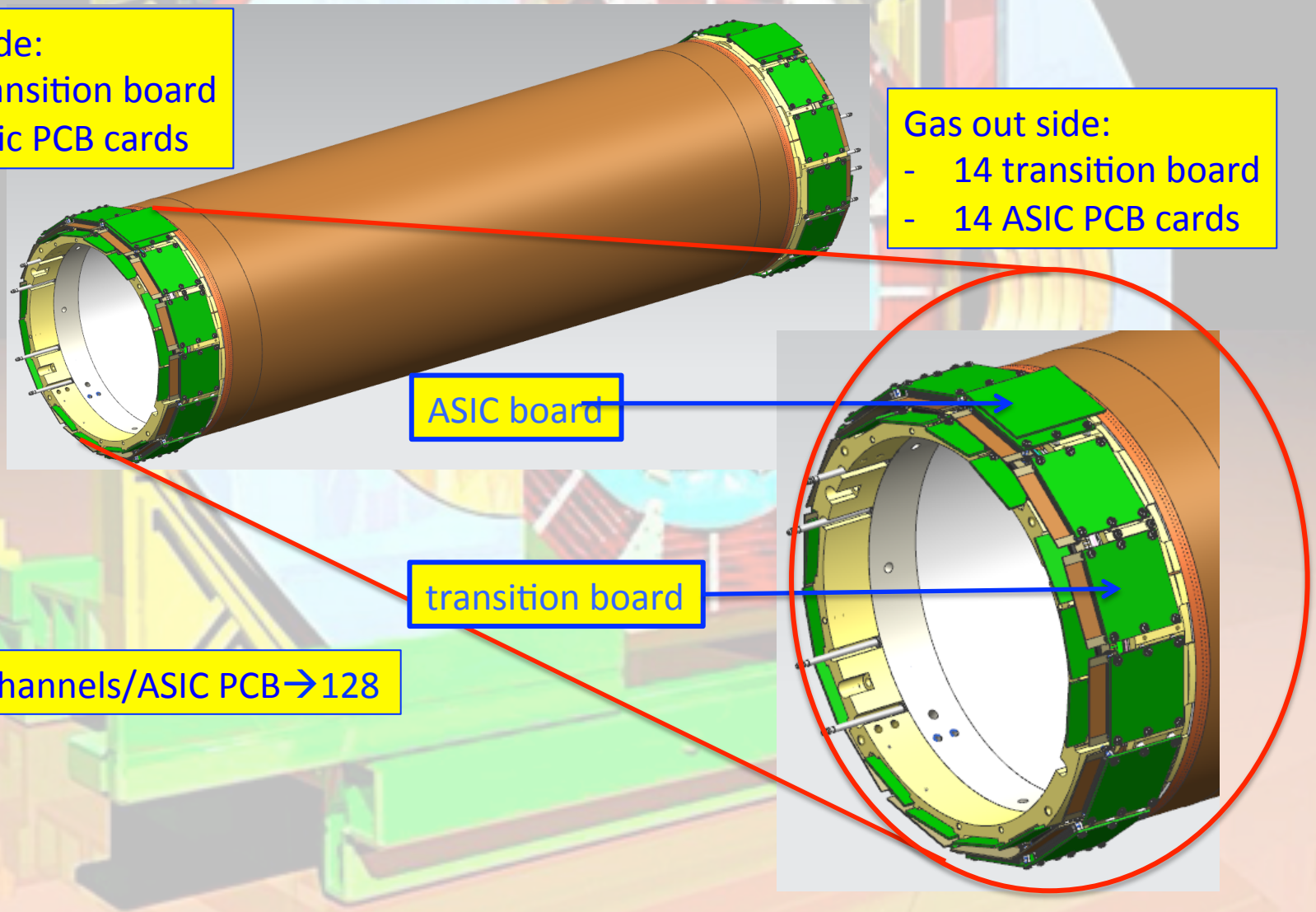

n. of channels/ASIC PCB→128

Layer 2:
signal & HV side view

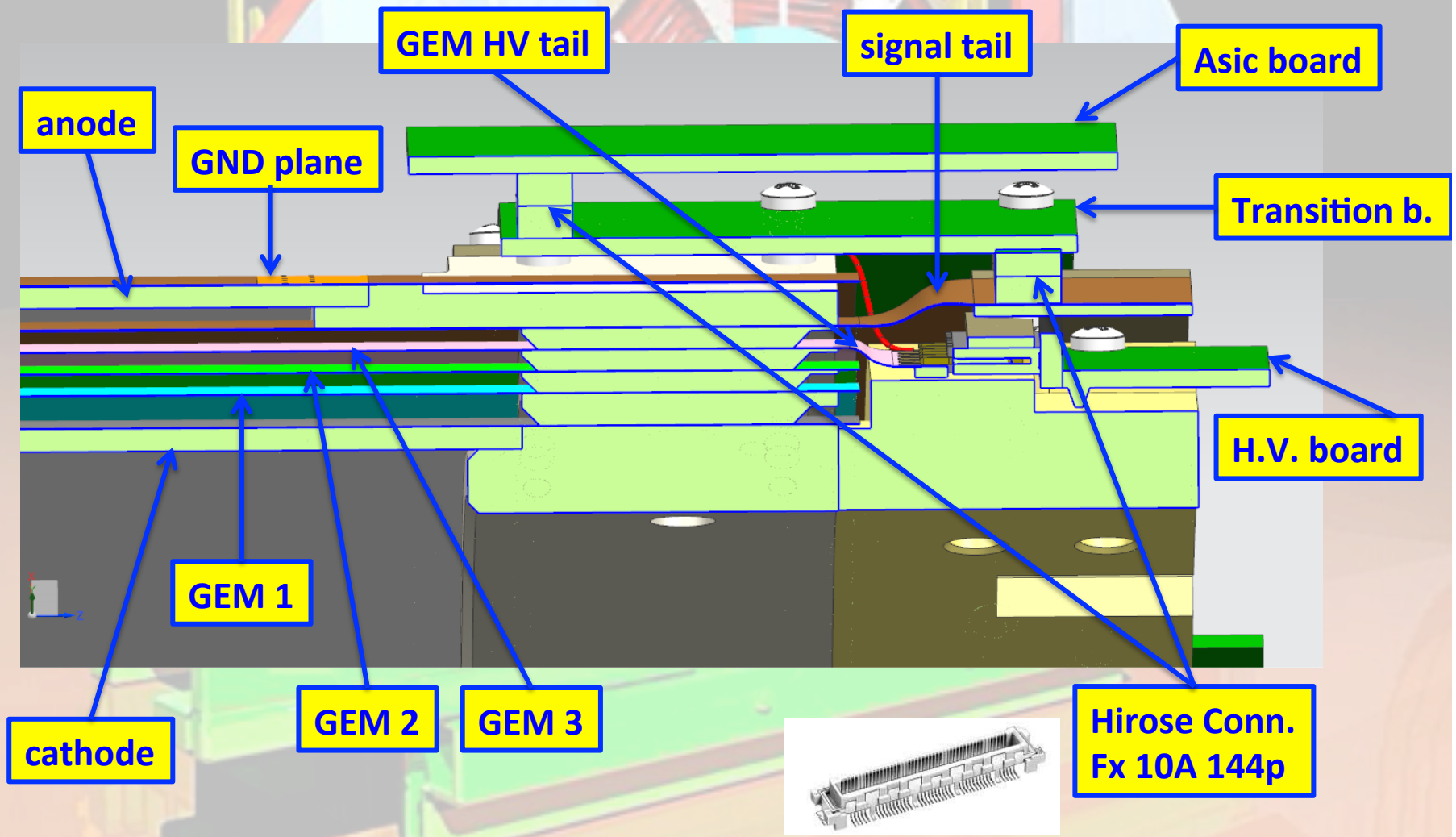

Layer 2:
connection flange

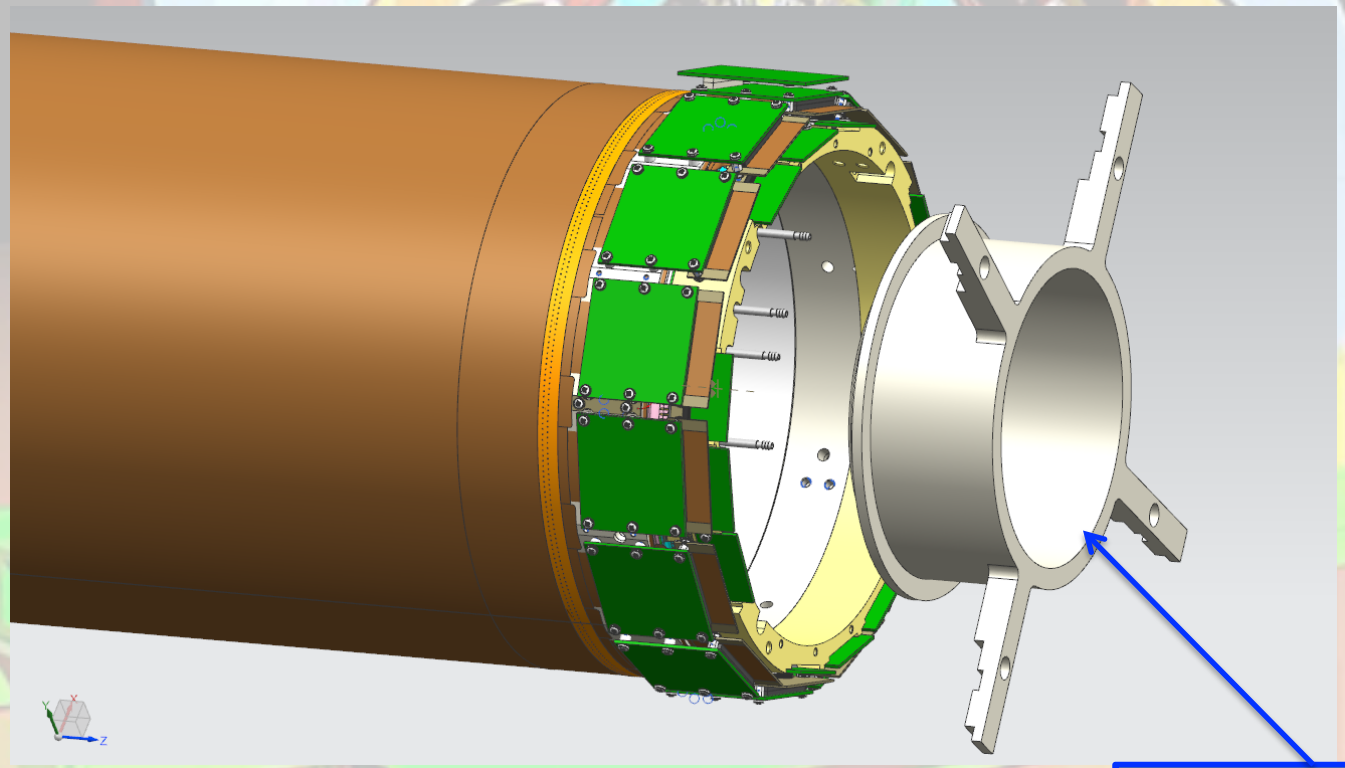

Connection flange

Layer 2:
Support flange

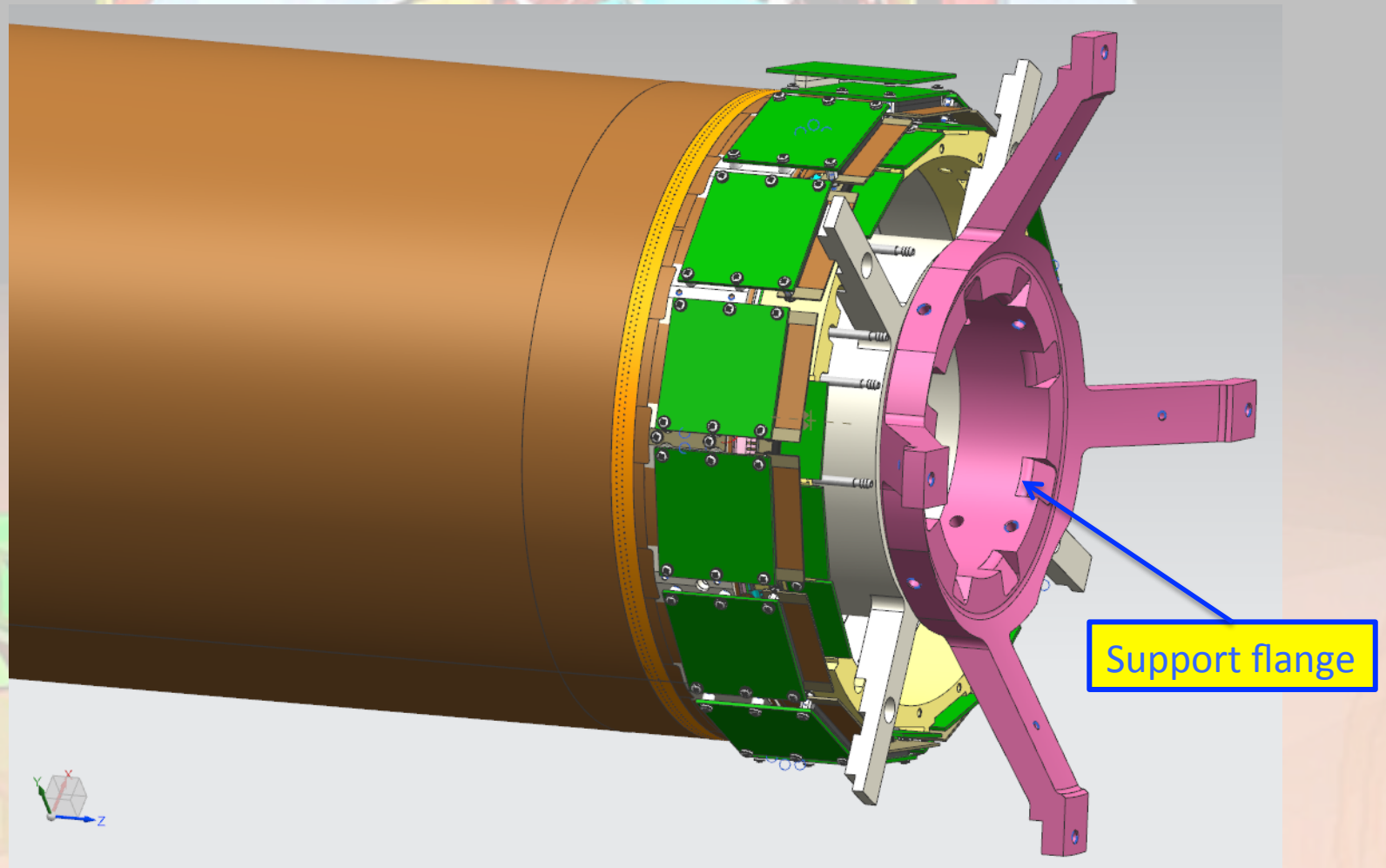

Layer 2:
connection flange

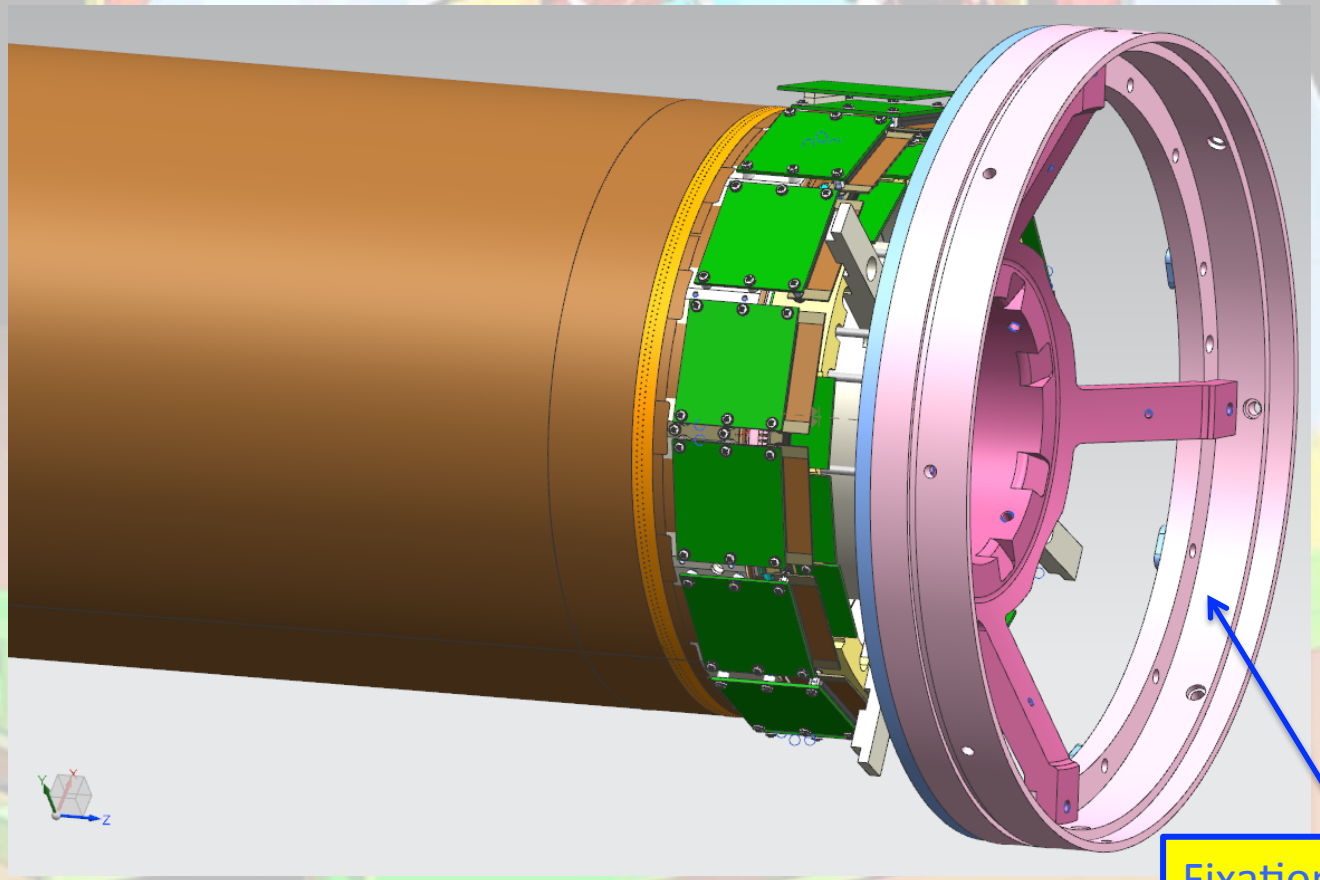

Fixation flange
On BESIII Deector

Conclusions

Present status of the project (layer 2)

- Cathode manufactured in Ferrara and ready;
- Three GEM layers assembled in Frascati and ready
- Anode design completed and commissioned at CERN
- Tooling for full detector assembly prepared and ready
- Layer 2 will be assembled soon
- Design of the Layer 1 is completed
- Design of Layer 3 is already started

Schedule for completing the Layer 2 of CGEM

- Anode construction (CERN +LNF+ Fe) End November 2015
- Full Layer 2 assembly @ LNF Soon
- detector test with cosmic rays Spring 2016

Thank you