DC FEE R&D @ LNF

G. Felici

Outline

1. A bit of background (what are LNF Electronic Workshop skills ?)
    1. The DC of the KLOE experiment
    2. The cylindrical GEM based Inner Tracker for the KLOE experiment
2. BaBar DC FEE Overview (The architecture of BaBar DC FEE is still valid ? Can we reuse (some sections of) DC BaBar FEE ?)
    1. DC numbers
    2. FEE block diagram
    3. Analog to Digital Boards (ADB)
    4. The ELEFANT chip
    5. Triggered data flow
    6. ReadOut Interface Board (ROIB) block diagram
    7. Data Input/Output Module (DIOM)
    8. DC Trigger
3. Cluster counting in helium based gas mixtures
    1. FADC and local derivative tecnique
    2. LNF measurements (1992)
        1. Primary ionization estimation
        2. Measurements results
4. The TARGET1 chip (Can be used for cluster counting in SuxB DC ?)
5. Radiation environment – BaBar experience
6. DC Front-End Electronics @ LNF
7. Conclusions

KLOE DC & IT upgrade

LNF Electronic Service - KLOE experiment (I)

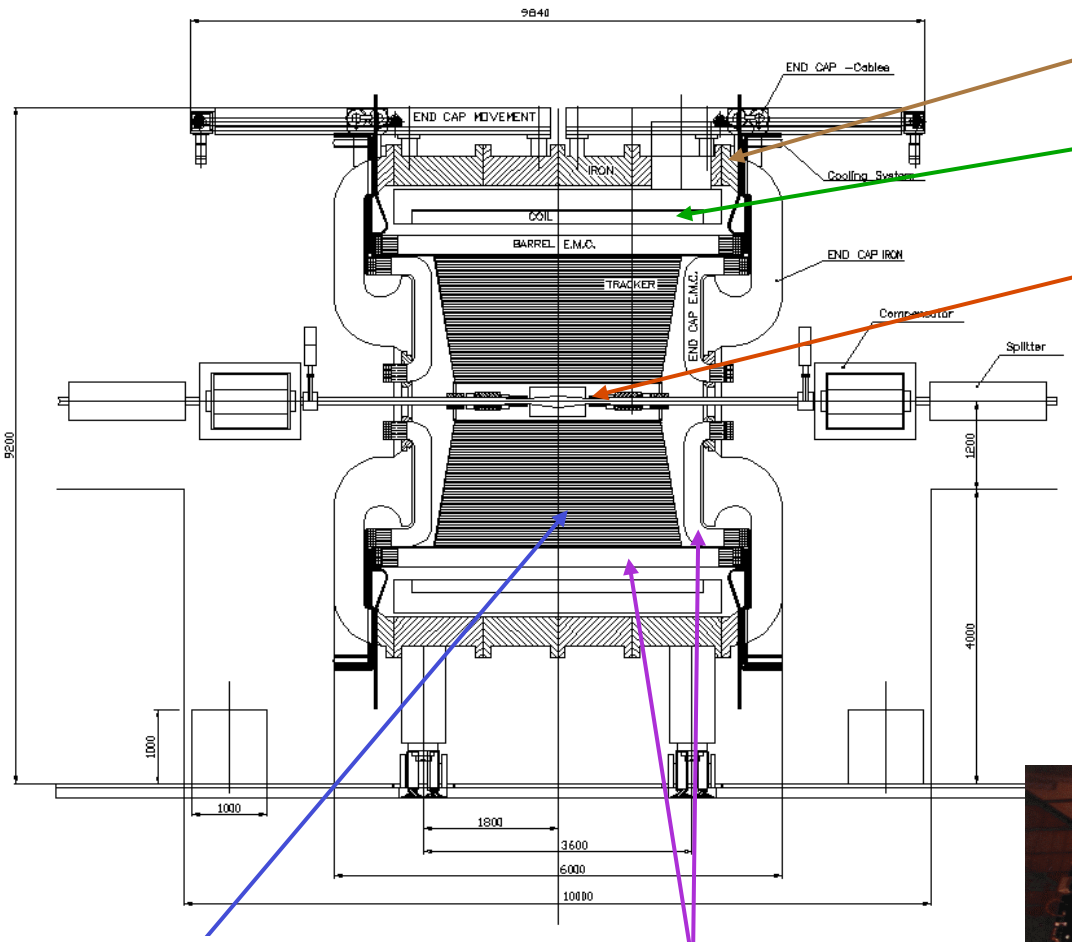

Iron

Superconducting magnetic Coil *B=0.6 T*

Beam Pipe (Be - 0.5 mm)

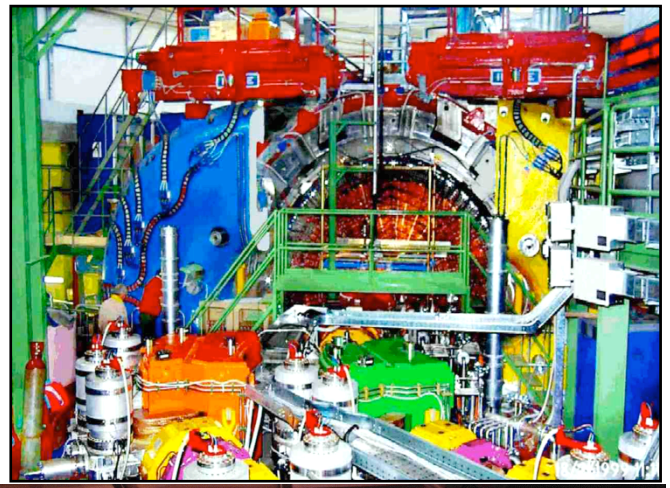

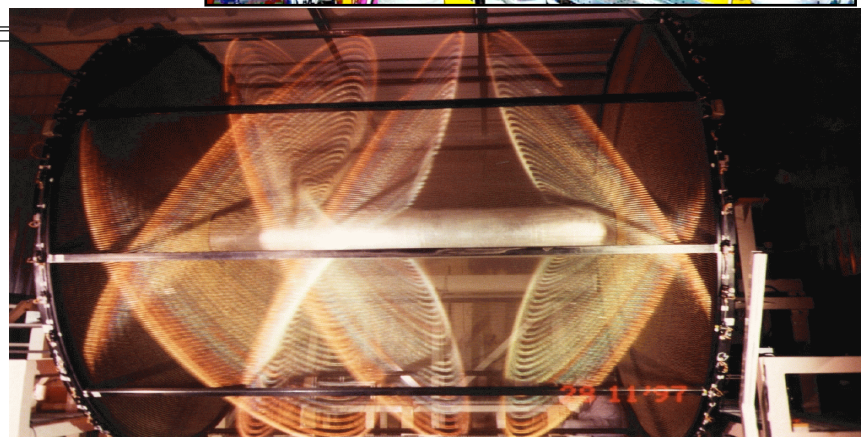

Drift Chamber
4 m diameter, *3.3 m* L
90% He, *10%* Iso
Stereo Wires

e.m. calorimeter
Pb / Scintillating fibres
(Endcap – Barrel)

LNF Electronic Service - KLOE experiment (II)

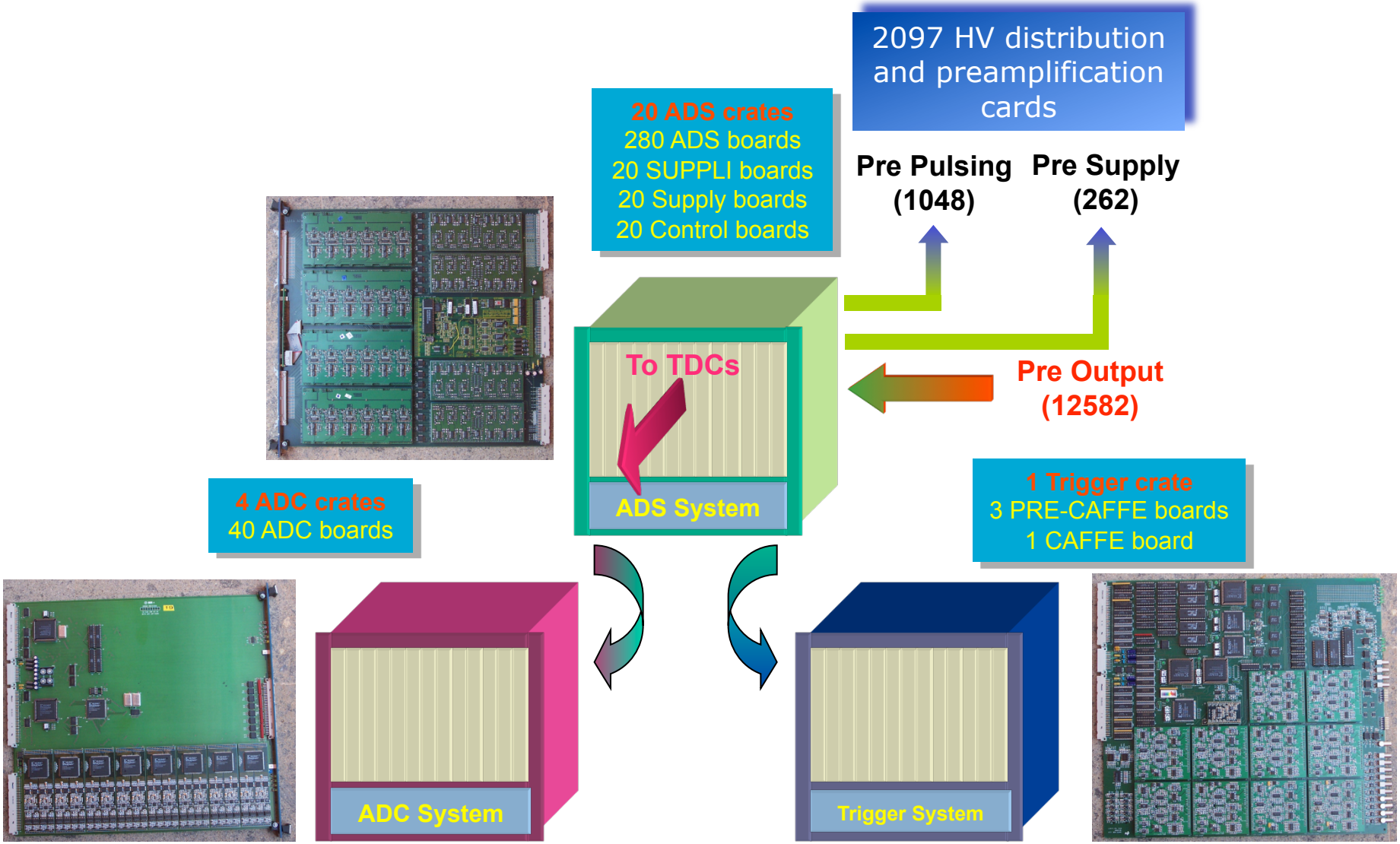

LNF Electronic Service - KLOE experiment (III)

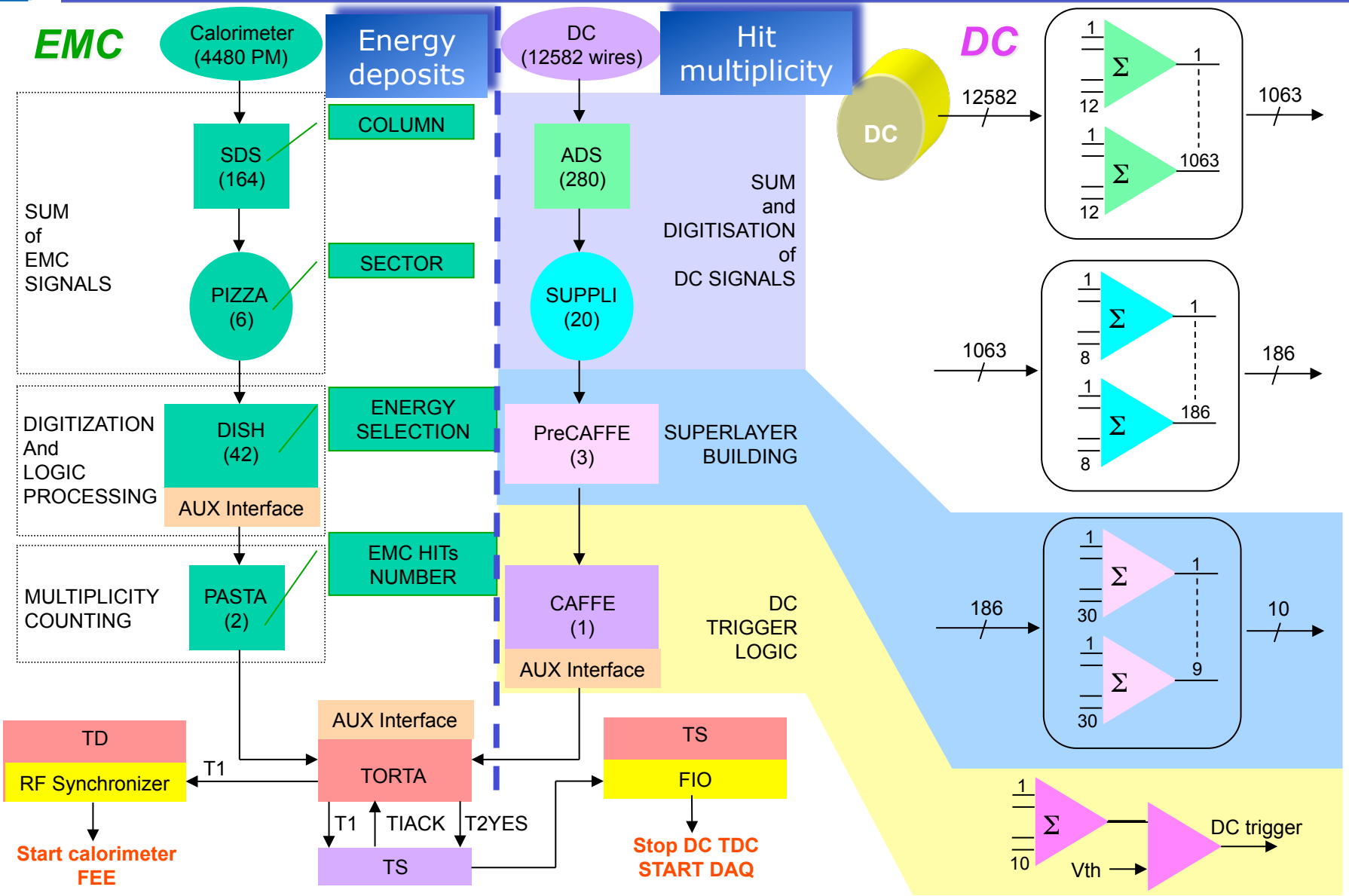

LNF Electronic Service - KLOE experiment (IV)

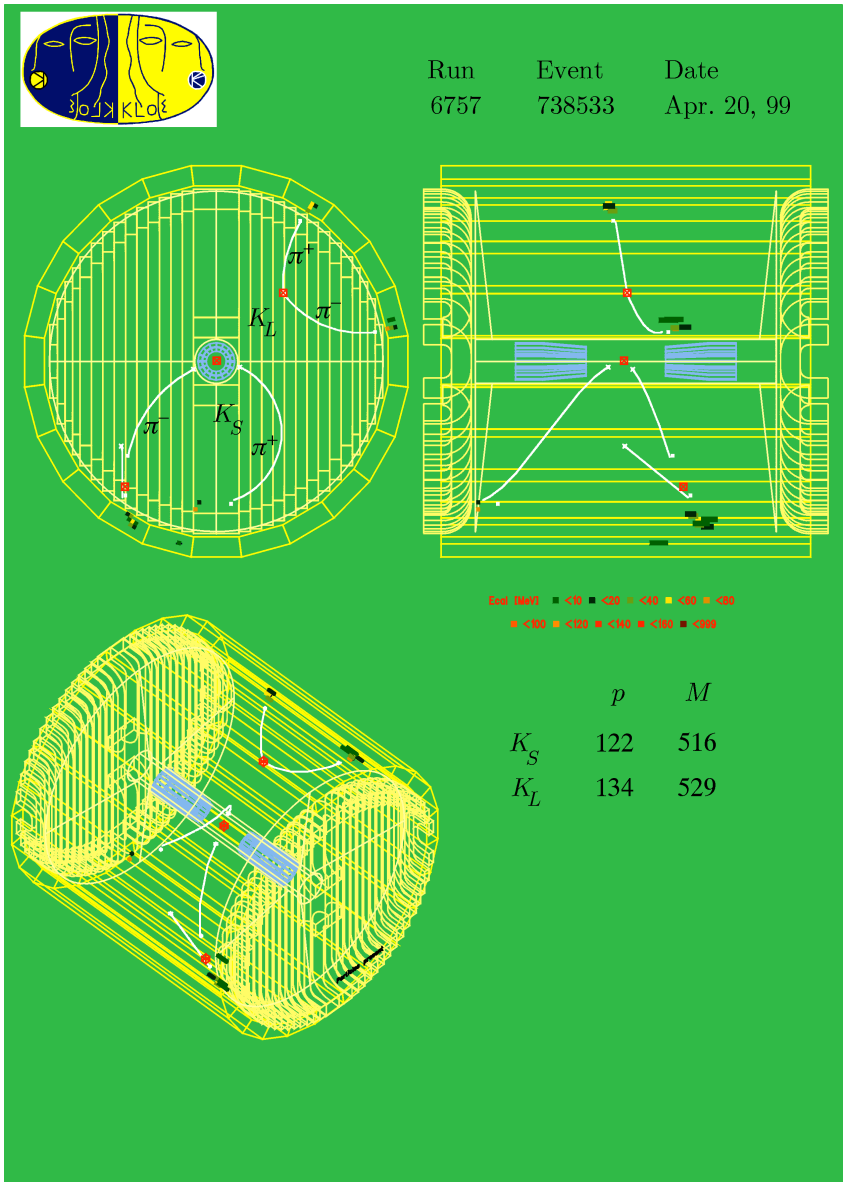

Chamber working conditions

- HV :
  - 1870 V big cells (3x3 cm²)
  - 1750 V small cells (2x2 cm²)
  - → $A_{V\ GAS} \approx 10^5$
- Soglie: 3 mV (3 fC)
- Dead channels : ≈ 0.5%

Charged decay DC trigger efficiency

Decay Channel	DC (1) Eff., %
$K_S \to \pi^+\pi^-$, $K_L \to \pi^+\pi^-\pi^0$	98.8 ± 0.1
$K_S \to \pi^+\pi^-$, $K_L \to \pi^\pm e^\mp \nu_e$	98.4 ± 0.1
$K_S \to \pi^+\pi^-$, $K_L \to \pi^\pm \mu^\mp \nu_\mu$	98.2 ± 0.1

LNF Electronic Service – Inner Tracker [KLOE upgrade] – (I)

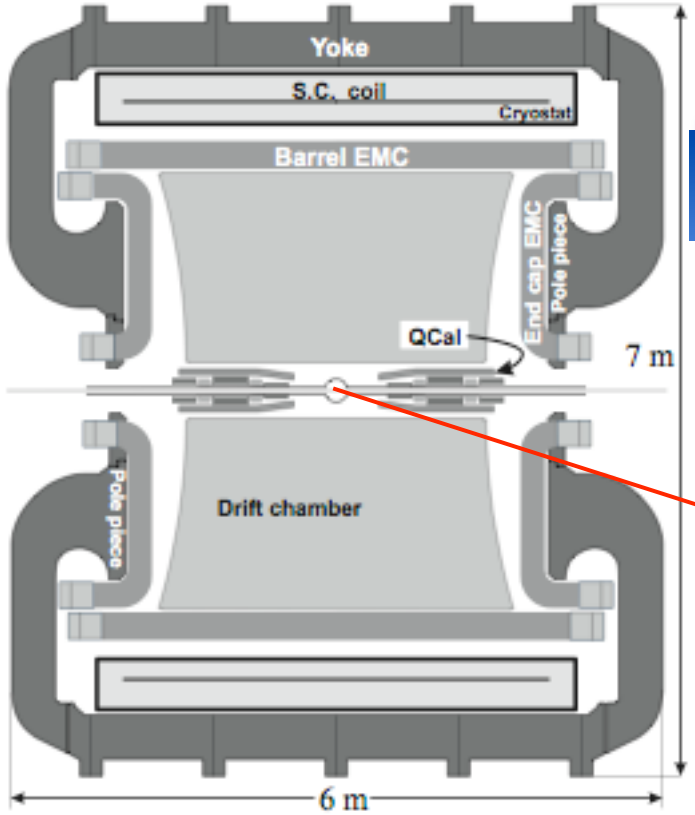

IT Requirements
[K_S ,K_L for interferometry studies, $K_\pm$ and η decays]

- $\sigma_{r\varphi}$ = 200μm and σ_Z = 500μm spatial resolutions;
- 5 kHz/cm2 rate capability;
- 2% X0 overall material budget.

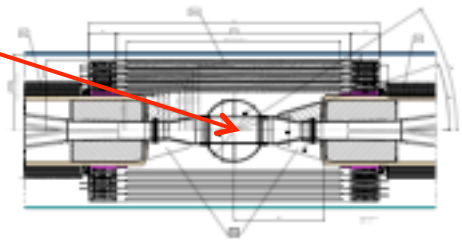

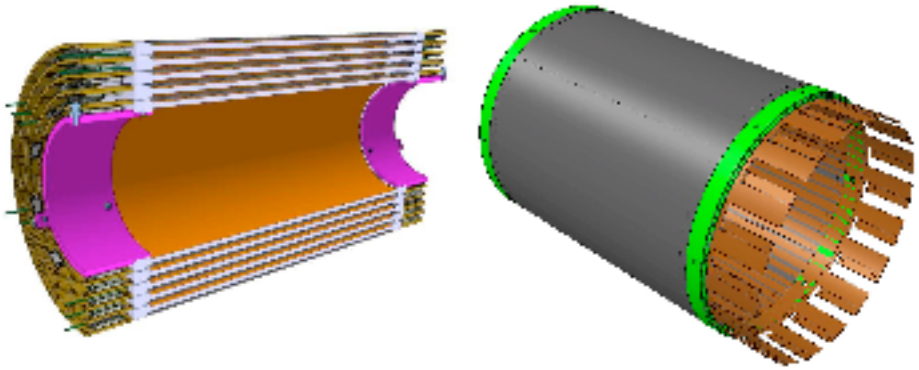

LNF Electronic Service – Inner Tracker [KLOE upgrade] – (II)

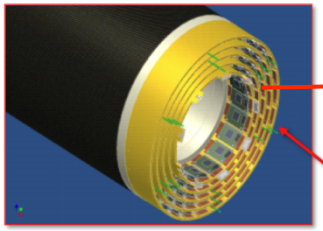

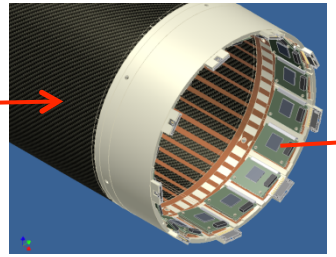

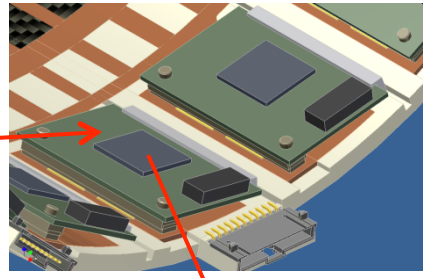

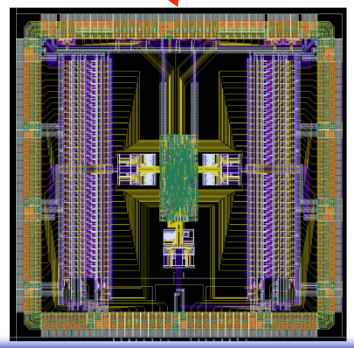

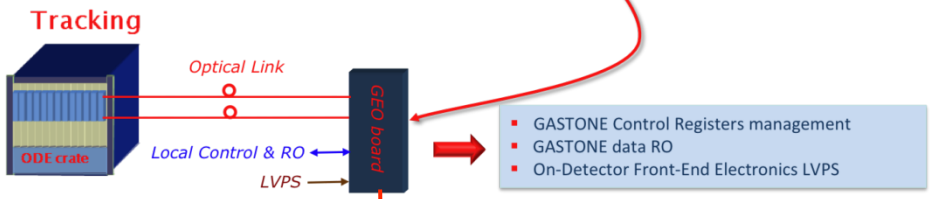

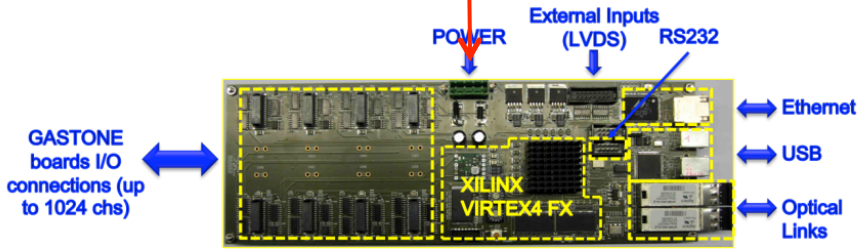

64 chs GASTONE chip – 0.35μ
(LNF – Ba)

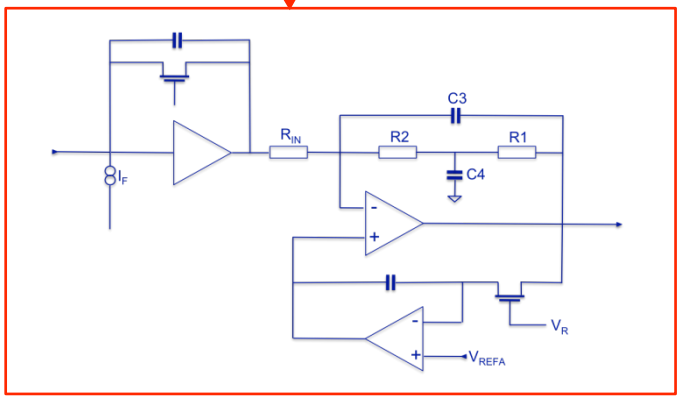

≈ 34000 stereo strips RO

BaBar DC FEE

BaBar FEE – DC

DC numbers

- Cylindrical (≈ 1.6 m external diameter, ≈ 2.75 m length)
- Hex-cells (≈ 1.2 cm (radial dir) x 1.7 cm (azimuthal dir)
- 10 superlayers (4 layer each) – 4 axial – 6 stereo
- 7104 cells
- He:Isobutane (80%/20%) gas mixture - 22 i.p./cm per mip - 44 electrons (total ionization)
- Average charge per electron ≈ 8 fC (20% collected in first 10 ns)

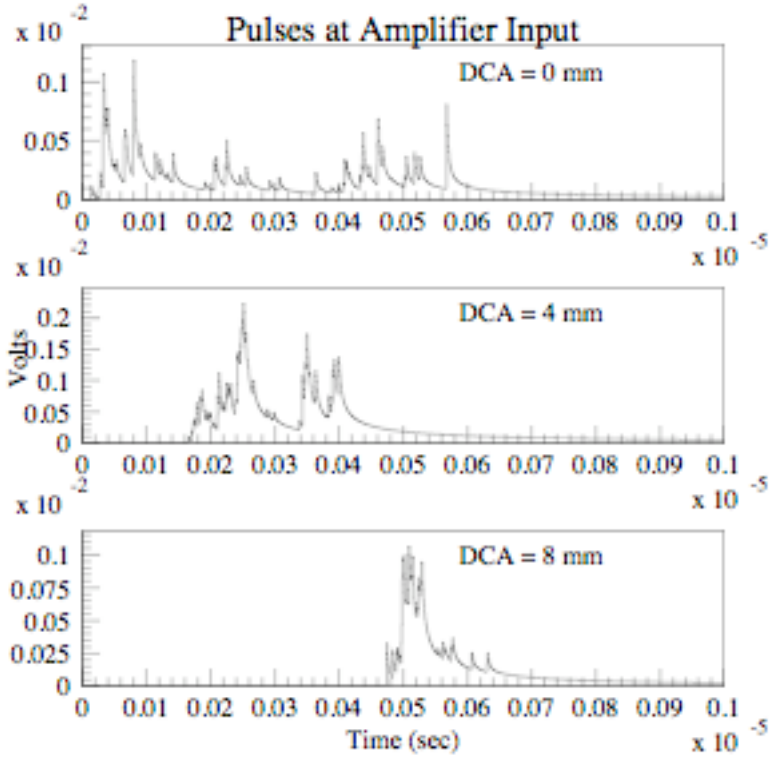

BaBar FEE – Block Diagram

Requirements

- Tracking (charged-particle momentum and event reconstruction)
- dE/dx (particle identification)
- Trigger (multi-charged-particle trigger for the BABAR detector)

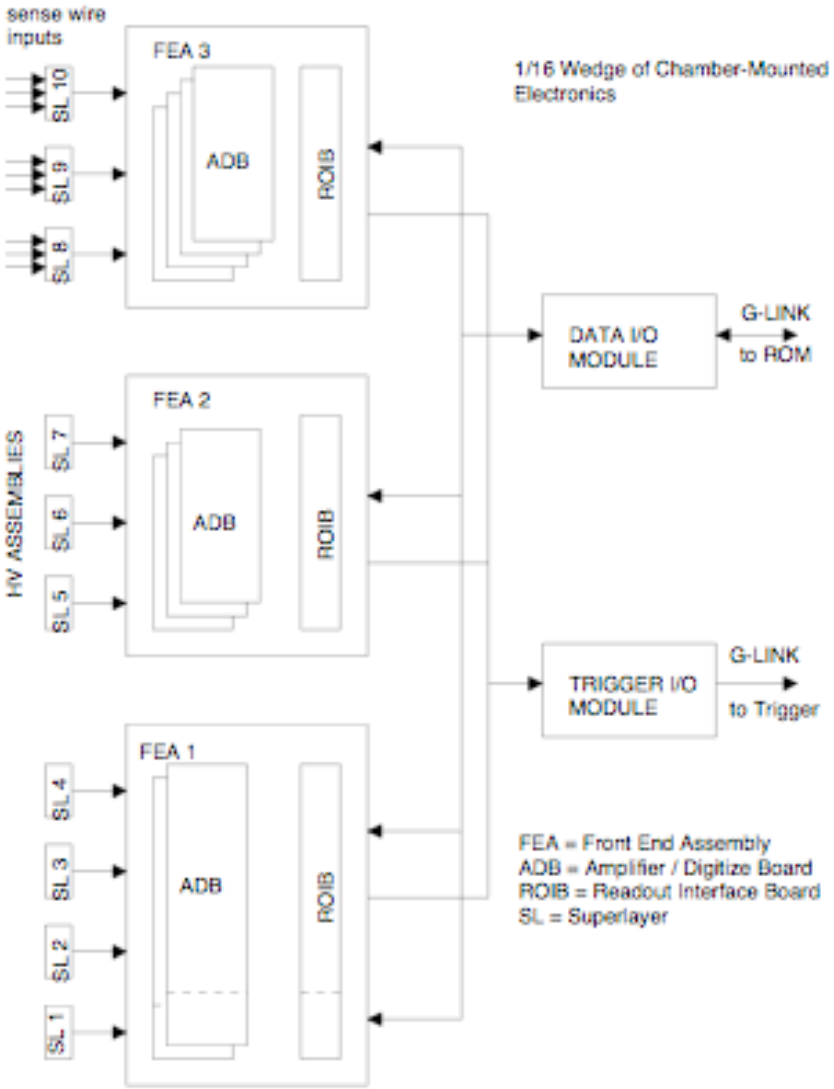

BaBar FEE – Analog to Digital Board (ADB)

High-bandwidth transimpedance amplifier (input impedance adjusted to terminate the sense wire transmission line impedance) + Discriminator

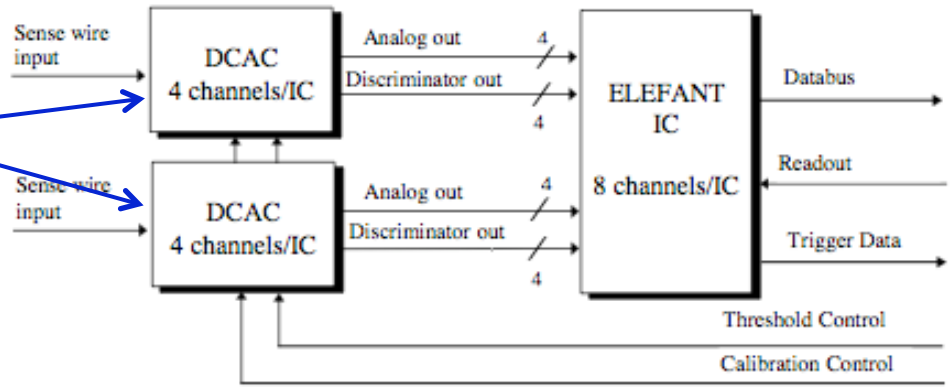

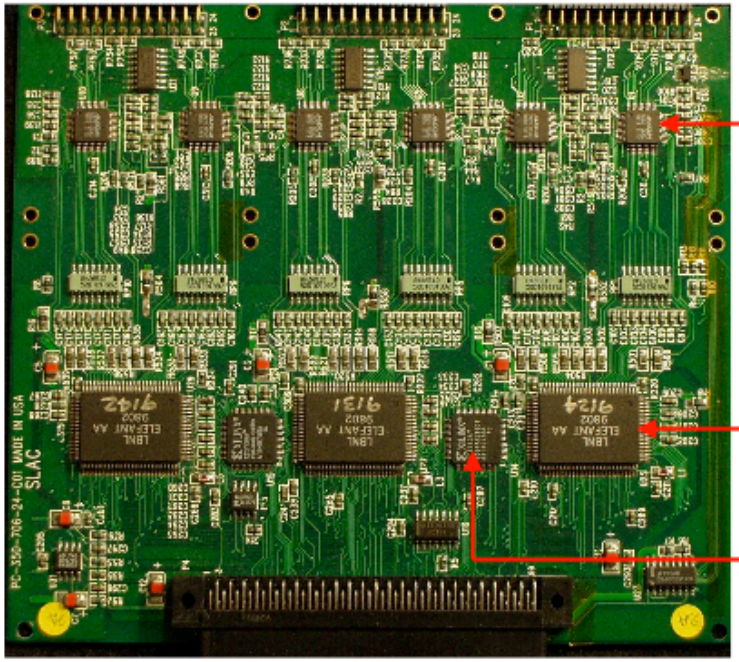

"DCAC"
Commercial amplifier & calibration

"ELEFANT"
8 channel 6b TDC/ADC ASIC
Buffers 32 15MHz samples/ch on L1A
4 events deep
Generates untriggered waveforms @15MHz

TRIG_MUX FPGA
Stretches untriggered waveforms to 3.7MHz sampling and serializes 4 channels onto 1 output stream (15MHz).

BaBar FEE – ELEFANT block diagram

BUFFER
hold data 12.9 μs
(192 sample clock cycle)

8 complete channels (amplitude + timing)

RO BUFFER (4 events)
2.2 μs (32 samples)

8 complete channels (amplitude + timing)

6 bits - 14.875 MHz

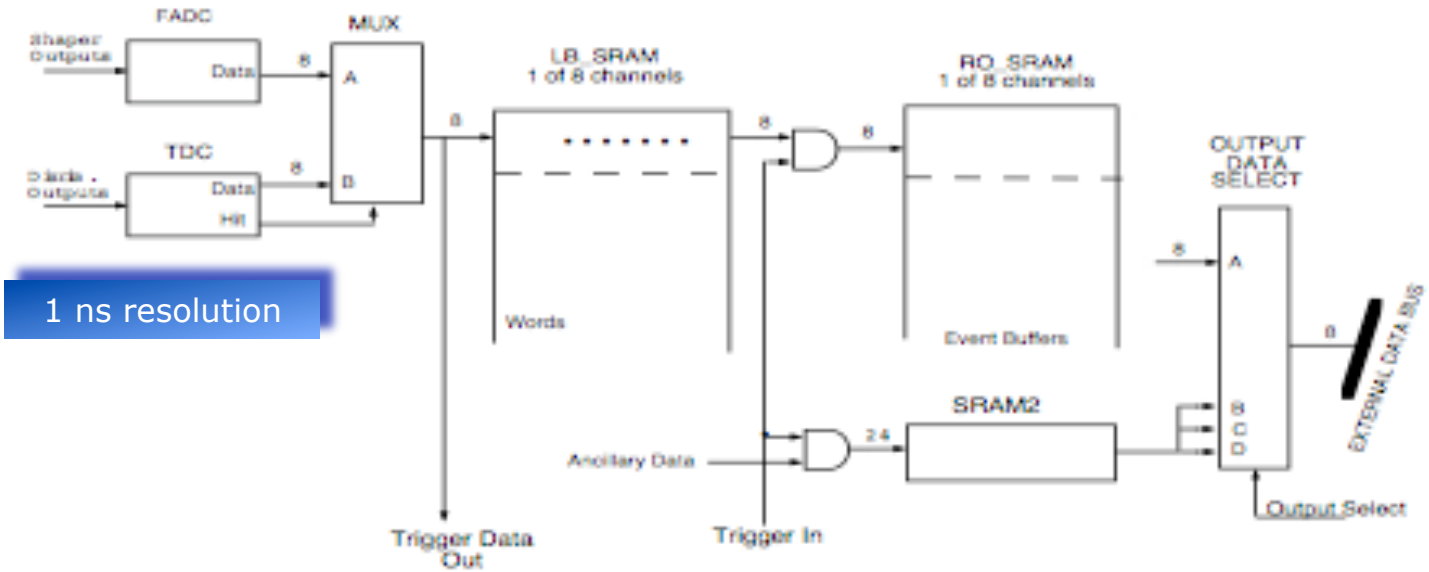

1 ns resolution

BaBar FEE – Triggered Data Flow

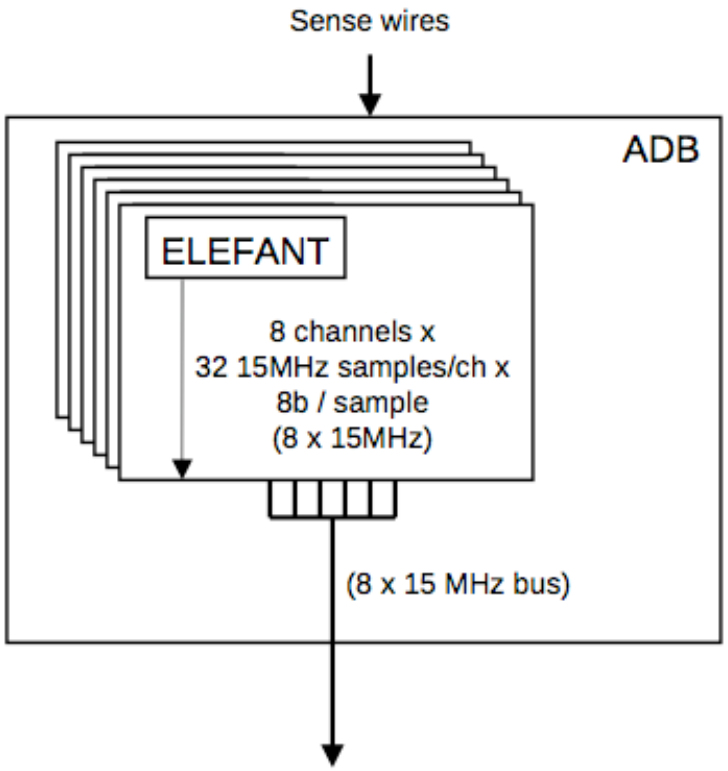

- ELEFANT continuously buffers data for 12 μsec (L1A latency)
- On L1A ELEFANT moves data to event buffer
  - 32 samples/ch x 8 channels
- Event buffers are drained via an 8b 15 MHz bus
- ~250 bytes / ADB = 16 μsec + up to 17 μsec overhead

BaBar FEE – ReadOut Interface Board (ROIB) – block diagram

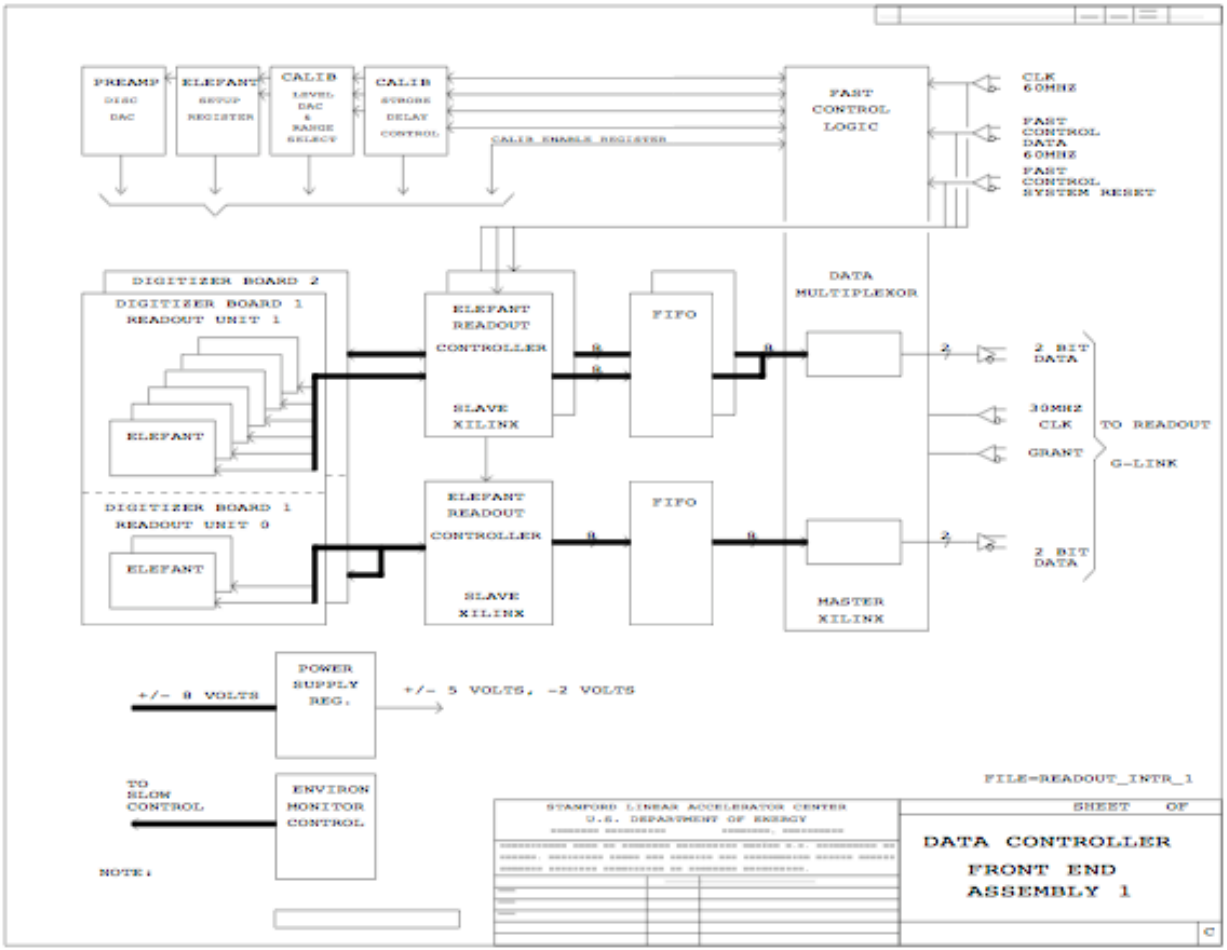

- Decode commands from Fast Control and perform appropriate operation
  - L1 Accept
  - Event Read
  - Sync & Calibration
  - …
  - Subsystem specific commands
    - ELEFANT IC configuration & calibration
    - ….

READOUT PROCEDURE

1. Readout ELEFANT chip into local FIFOs
2. After a fixed delay the master data controller starts FIFO data readout
3. Data are sent out on a 2-bit 30 MHz connection to the Data I/O

BaBar FEE – ReadOut Interface Board (ROIB)

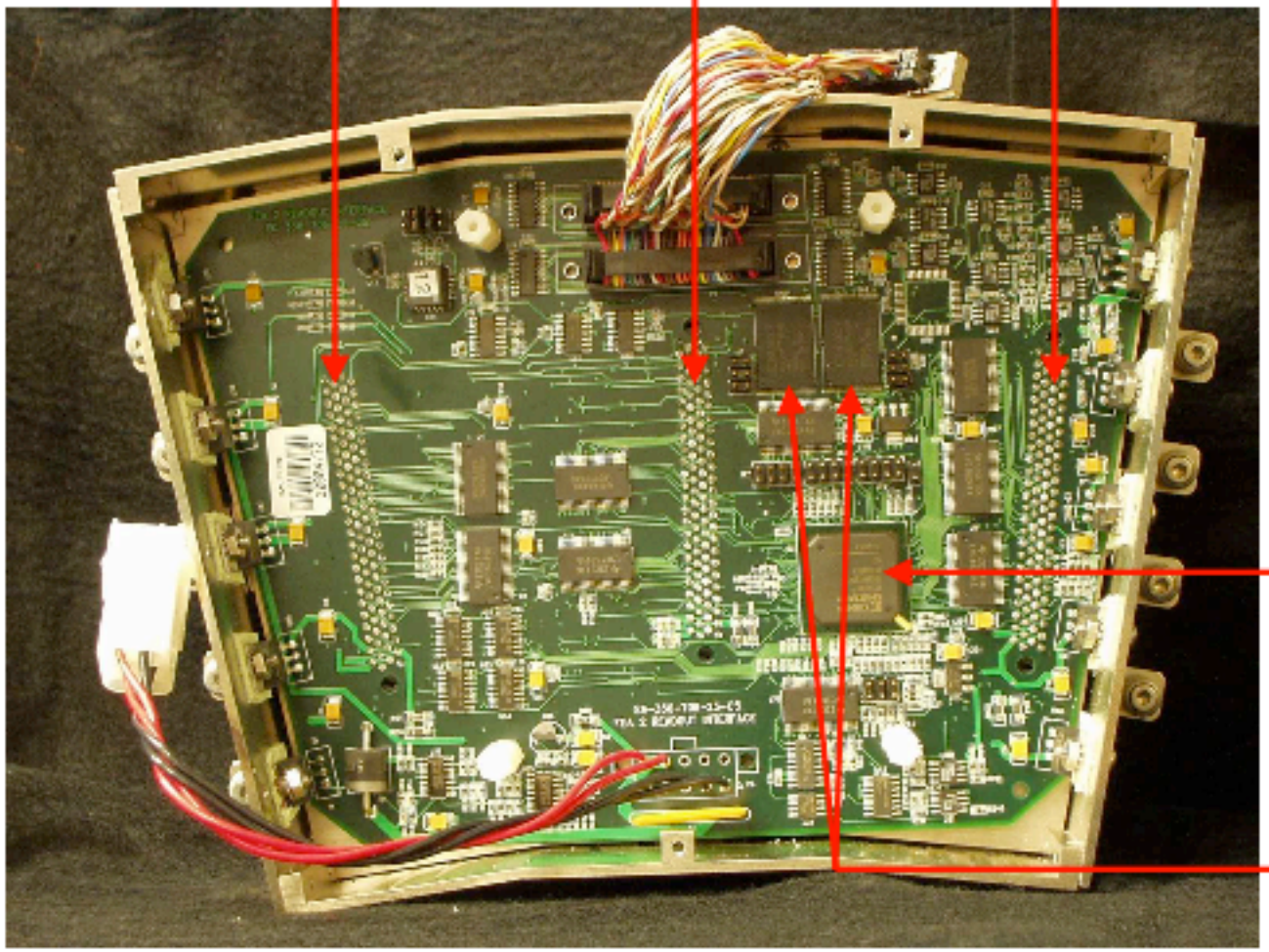

ADB connectors

Spartan3 FPGA
Decodes fast control cmds (L1A,RdEv,R/W cfg)

Reads data from 3 ADBs in parallel for triggered and untriggered data streams.

Applies feature extraction.

Remote Firmware Download
FPGA PROM can be reprogrammed over G-Link

BaBar FEE – Data Input/Output Module (DIOM)

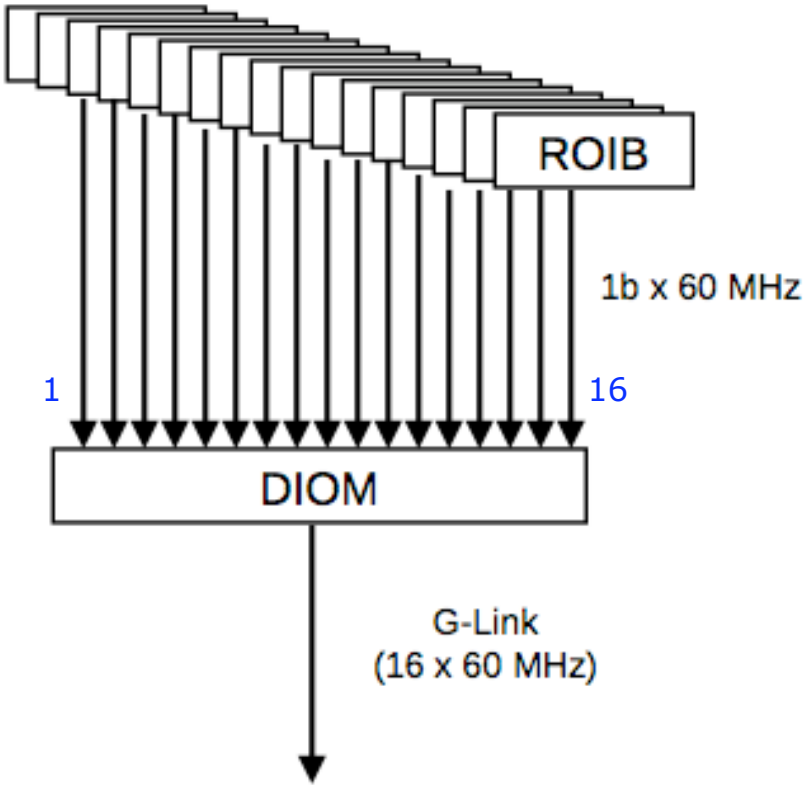

DATA INPUT/OUTPUT MODULE

1. Decode the READ EVENT and propagates it to FEAs
2. ELEFANT chips are readout into local FIFOs
3. After ≈ 20 μs (fixed delay) a GRANT signal is issued for each FEA
4. The FEA begins the synchronous data transfer from internal FIFOs to the G-link

BaBar FEE – Data Input/Output Module (DIOM)

4 Modules

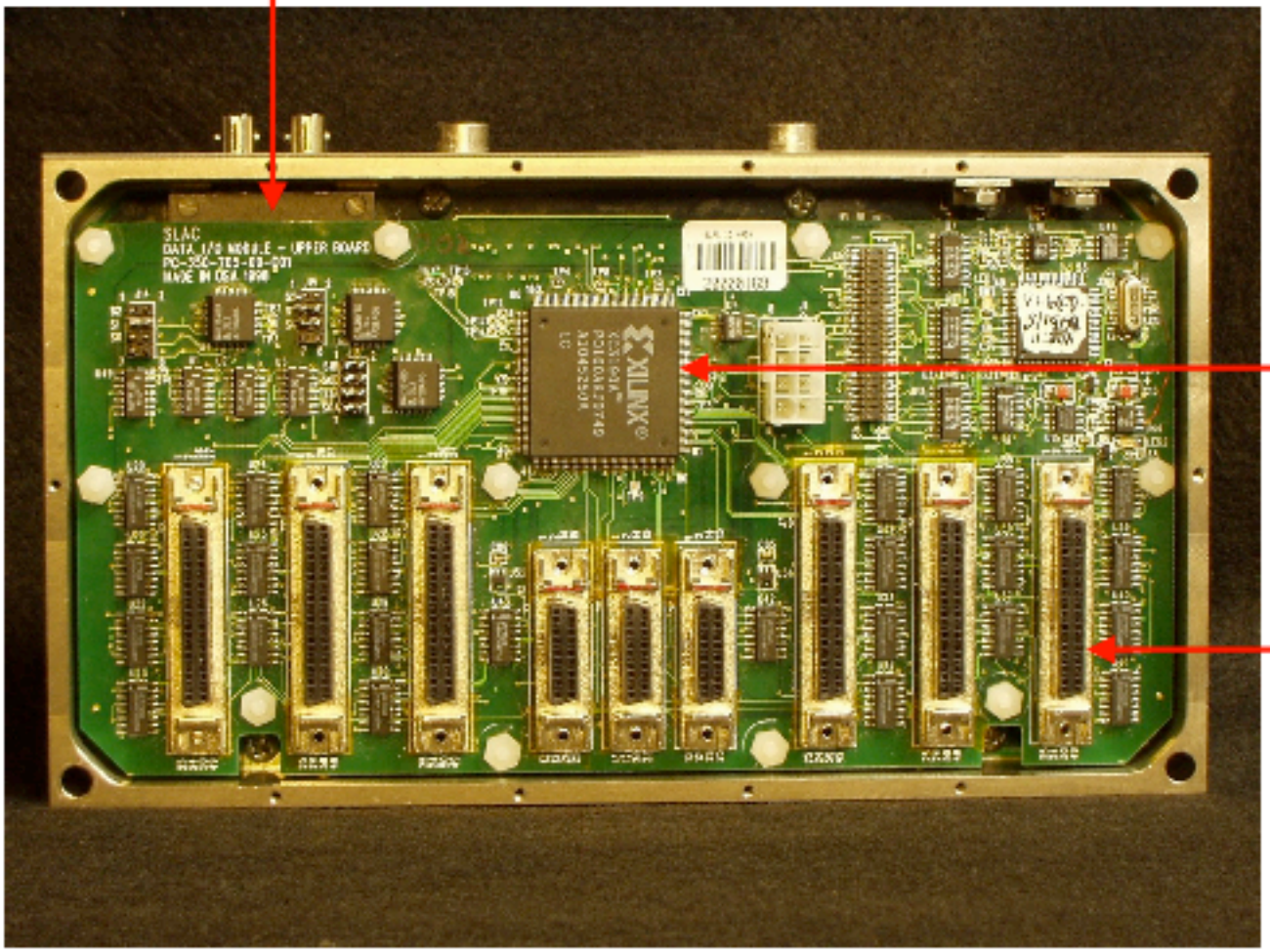

G-Link
60MHz clk
Fast control cmds
Triggered data return

FPGA
Decodes reset
and read cmds.
Distributes fast control
to FEAs.

I/O to FEAs

BaBar FEE – DC Trigger

Chain

- Trigger interface require hit information from every channel at a trigger rate of 3.7 MHz
- The ELEFANT presents on 8 output pins the status of readout buffer at a sample rate of 14.873 MHz
  - Presence of TDC data in the sampling period or over-threshold signal from ADC data
- A dedicated FPGA in ADB board provide down samples ELEFANT trigger data output (by stretching and multiplexing) to 3.7 MHz and serialized on the ROIB on a 59.5 MHz line.
- 16 data channels are sent out on each 59.5 MHz trigger link to the Trigger Input/Output Module (TIOM).
- The TIOM multiplexes 20 links on a fiber that is sent to the trigger system

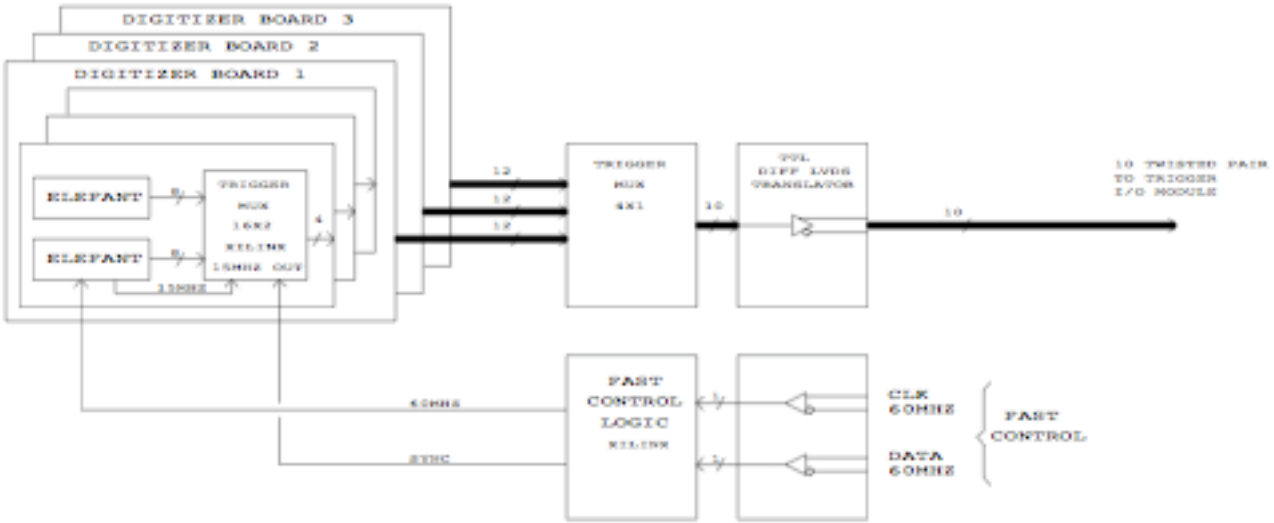

Cluster Counting

Cluster Counting (I)

dE/dx using cluster counting [Walenta]

→ Counting of primary ionization acts avoids Landau fluctuations in dE/dx measurements

→ Possible in gas mixtures with low primary ionization and slow electron drift velocity

Cluster counting technique - FADC

→ Fast preampifiers/shapers

→ Fast digitization devices

→ Flash ADCs [Grancagnolo et al]

- Pros : high precision in reconstruction of charged particles dE/dx & low noise sensitivity
- Cons : data amount (data processing required) & power dissipation (if integrated in the on-detector electronics section)

Cluster Counting (II)

Cluster counting technique – Local derivative [G. Felici, G. Bencivenni – LNF-92/036]

→ Fast preampifiers/shapers

→ Fast digitization devices

→ Local derivative method :

- Pros : can be easily integrated in the on-detector electronics section & low power dissipation & no data processing required
- Cons : accurate tuning required & noise sensitivity

Setup

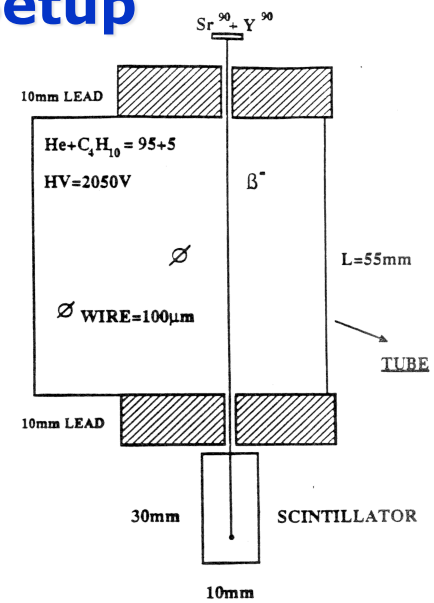

- Gain = 10mV/μA
- tr = 4 ns

Readout Electronics

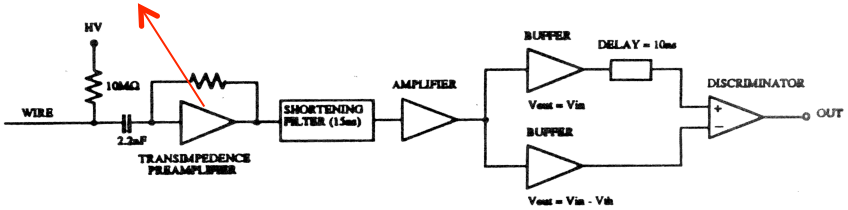

He : ≈ 5.9 n_P/cm
$isoC_4H_{10}$: ≈ 46 n_P/cm

} 95%/5% gas mixture : ≈ 8.1 n_P/cm

Primary ionization upper limit estimation

First cluster arrival time for tracks with d ≈ 0 impact parameter
Space-time relation

$$f(x) = \lambda^{-1} \cdot e^{-\left(\frac{x}{\lambda}\right)}$$

$$\lambda^{-1} = 2 \cdot N_0$$

Main limitations:

- collimator size (± 0.5 mm)
- β-electrons multiple scattering

λ upper limit estimation

7.1 ± 0.3 n_p/cm

Space-time relation
He/Iso = 95%/5%
HV = 2500 V

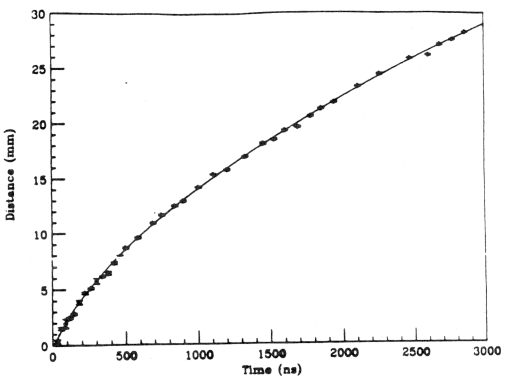

First cluster space distribution

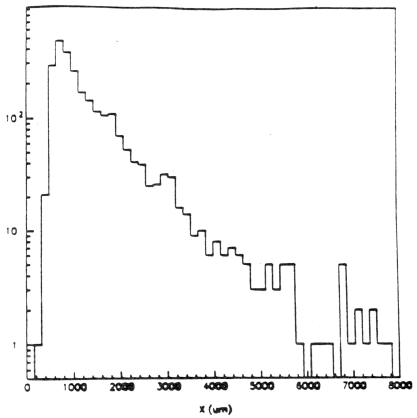

n_p./cm vs HV

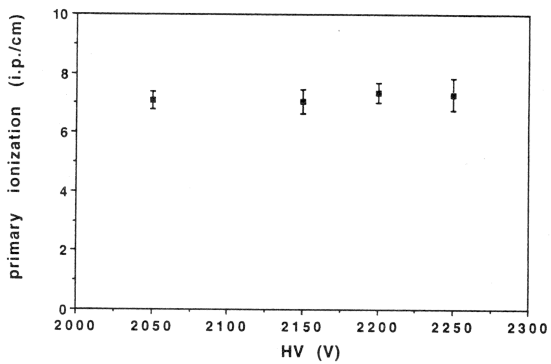

Measurement results

Average cluster size ≈ 1.5÷1.6 electrons because of secondary ionization

Due to diffusion clusters blow-up while drifting toward sense wire → electron separation time smaller than expected

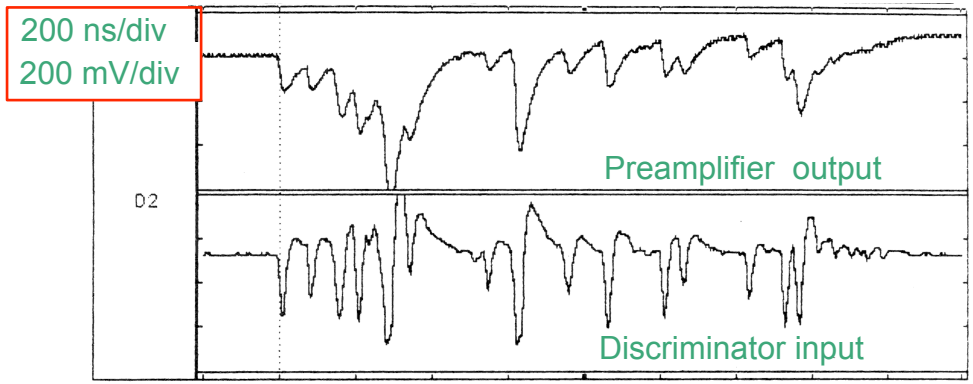

Measurement dead time must be carefully selected

≈ 87% detection efficiency @ 10 ns dead time

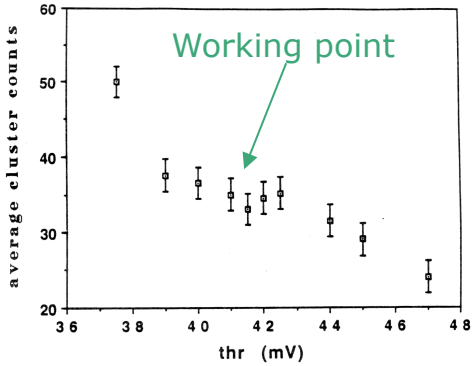

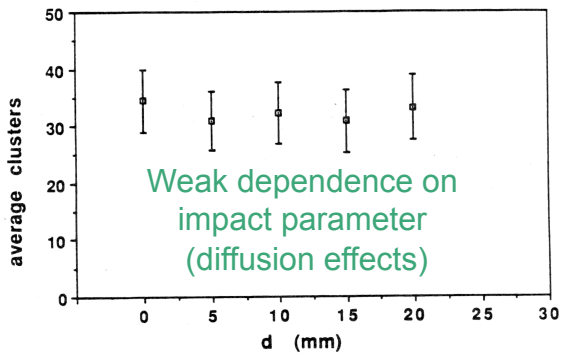

Critical items

- Dead time
- Single electron cluster detection efficiency (gain fluctuation, space charge effect)

TARGET1 (I)

16-channel, GSPS Transient Waveform Recorder with Self-Triggering and Fast, Selective Window Readout

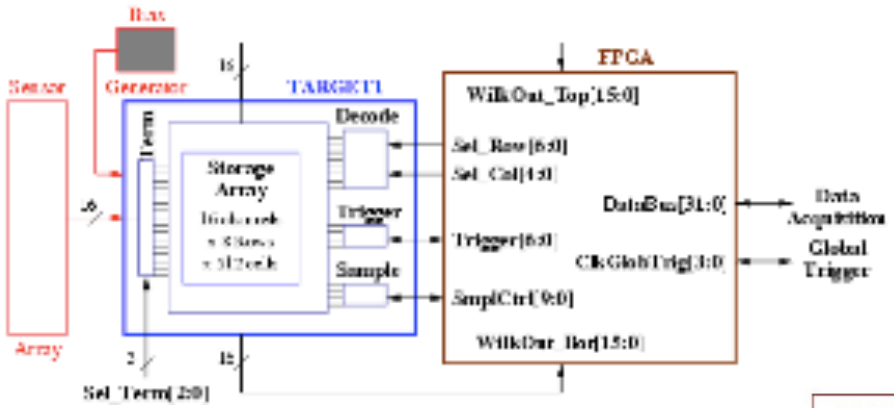

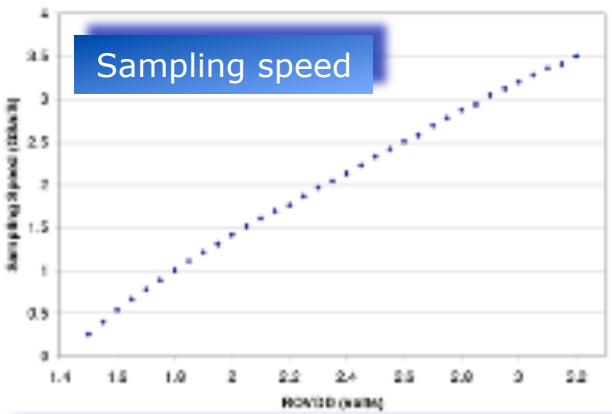

Sampling speed

Temperature compensation required for fixed sampling frequency

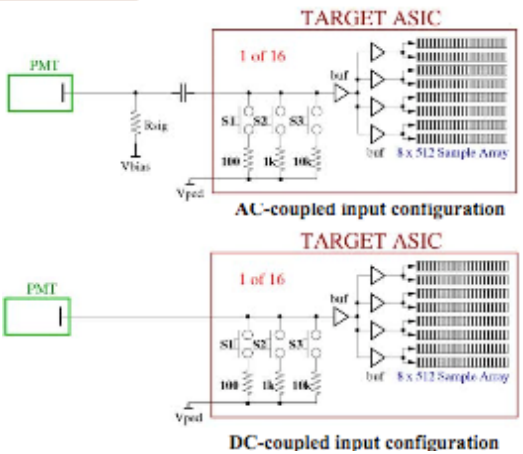

Features

- High density (16 channels)
- Good timing performance
- 9-10 bits of resolution
- Fast conversion (<0.5us/32 samples)
- Random access to groups of 16 samples
- Flexible operating modes
- 100Ω, 1k and 10k programmable terminators

Key Specifications

- Low power (<10mW/channel)
- Giga-sample per second recording
- Selective (windowed) readout
- 4,096 storage samples/channel

Applications

- Next generation TeV gamma readout
- Low-cost, highly integrated systems
- Collider Detector instrumentation
- Portable/pocket oscilloscope

Readout rates up to 50kHz (2 channels ?)

TARGET1 (II)

Input Stage

AC-coupled input configuration

DC-coupled input configuration

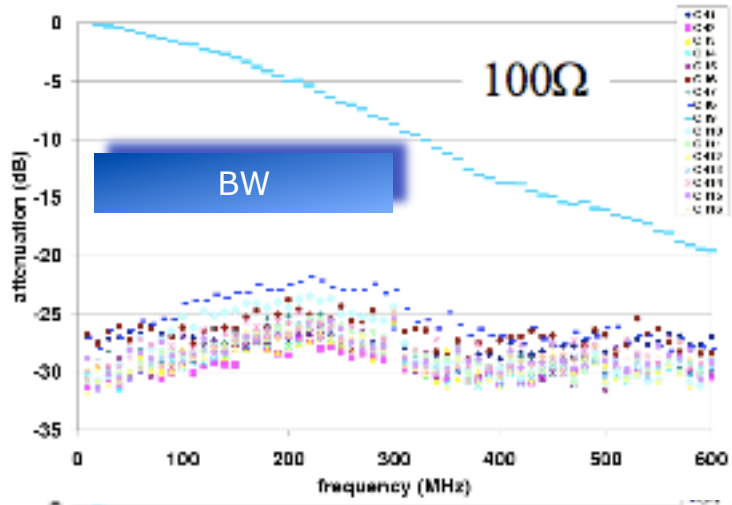

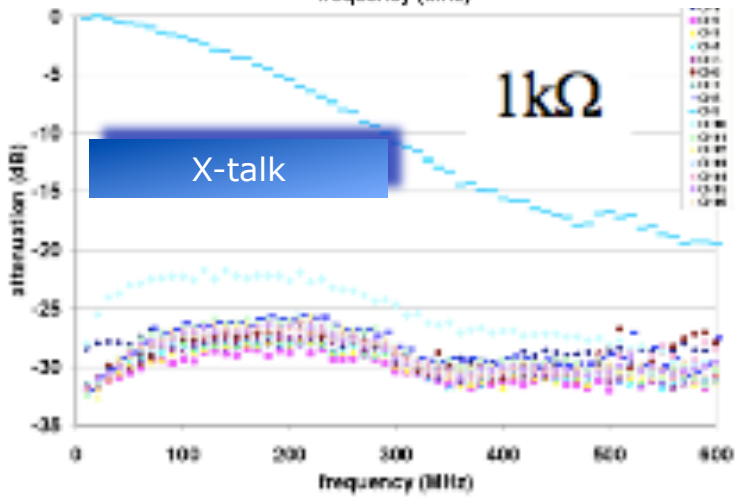

One or two state machine required to manage TARGET1 chip

Radiation Environment

Radiation upset (BaBar experience)

- **Radiation upset** has been detected in FEE FPGA
- They found about 1 SEU/ROIB/hour
- Only 1/20 produce a functional upset
  - BaBar reconfigure the DCH electronics when any data integrity check fails (≈ 2/day)
- Radiation damage was detected also in voltage regulators after ≈ 2 years exposure

LNF activity

&

Conclusions

Front-End Electronics R&D (2009)

- Chamber prototype instrumentation (KLOE DC FEE)
- Cluster counting feasibility study
  - local derivative method
  - oscilloscope acquisition
- RO architecture
  - BaBar "like"
  - Cluster counting option

Conclusions

- **Cluster counting** technique looks very interesting for dE/dx measurement, but can be difficult to manage ≈ 10 kchs (power dissipation & system calibration)

- **Reuse of (sections) BaBar DC FE :**
  - BaBar experience discourage the use of commercial off-the-shelf (COTS) devices because radiation background (remote/local FPGA reprogramming is useful, but could not be enough for radiation tolerant design)
  - Power dissipation and material budget must be also considered

- **BaBar DC FE architecture** worked well (as far as I know …), so it could be successfully used for SuperB DC.